Operation Instructions Sonikcell Series Multi-string

ProtectiveBoardTester

This manual is suitable for testing the protective board of 1-20strings

Version V2.0

CONTENT

1. Outlook and Function of the Tester
2. Start and Use
3. Definition of Interface
4. Key Operation
5. Production Parameters
6. Basic Parameters
7. Type of the Protective Board
8. Optional Items
9. Production Test
10. On-line Software
11. Test of Work Step
12. Principle of Protective Check
13. Upgrade of Software
14. Accuracy Index of the Tester

1. Outlook and Function of the Tester

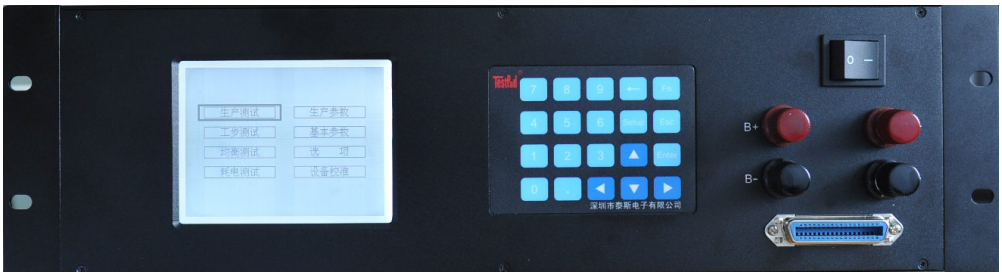

This tester adopts the standard 3U height instrument chassis design, can be freely extended and supports the use with multi-ones overlapped in a standard cabinet. The panel display adopts a mono-color LED display of a 320x240 resolution and can display the set parameters and the test result. The operation keyboard adopts light-touch keys and supports direct input of numerals. Including 4 heavy current and voltage wiring terminals.

Features of function

Sonikcellseries multi-string protective board tester is a high epise tester of various protective functions for testing the protective board from 1 string to multiple strings and features full testing functions and a high testing accuracy. The modularized insert-card chassis design makes users able to flexibly select the allocations and flexibly upgrade the tester, by means of adding a voltage expansion insert-card, to have it capable testing 8-string or 16-string protective board from the original 4-string, or, by means of adding a current expansion insert-card, enhance the current value of the over-current protection test to 70A or 105A protective current from the original maximum 35A testing current. In this way, the user, when to start a new test project with multi-string protective board, can freely select upgrade so as to protect the initial investment of it to the utmost.

Internal structure:

Each of Sonikcellseries protective board tester is comprised of casing, internal fixing baseplate, internal power supplier and user selectable insert-card circuit board.

The most basic allocations:

1.	Instrument chassis with baseplate	1 pc
2.	CPU board (including master CPU processor and internal resistance testing circuit)	1 pc
3.	Voltage board (can test 1-4 strings protective board)	1 pc (or several pieces, upon different models)
4.	Current board (can test 0-35A over-current)	1 pc (or several pieces, upon different models)

5. The internal power supplier includes:

a) 100VA ring transformer	1 pc
b) 5V/40A module switch power	1 pc (aimed at the test of the over-current within 40A) Or 2 pcs (aimed at the test of the over-current within 80A) Or 3 pcs (aimed at the test of the over-current within 120A)

When a user wants to have the protective board tester upgraded from 4 strings to 8 ones, only one master board of voltage board needs to be added, with the current testing range not increased, and the like, the tester can be upgraded at the utmost to testing a 20-string protective board.

When a user wants to enhance the current testing range, as 0-70A, one current expansion board and an extra 5V/40A module switch power needs to be added at the same time, and the like, the said range can be enhanced at the utmost to 120A over-current.

2. Start and Use

During use, this tester can be connected to a computer via the serial port (COM) of the computer and with standard RS232 communication line. It shall be noted that the serial port must be the original one (COM) of the computer and can not be connected by means of USB transit line and, if there is not the original serial port with the used computer (as a brand-new desk or notebook computer), the connection can be made through PCI serial port expansion card or PCMICA serial port expansion card.

The tester, when the parameters of it are set via the computer, can off-line work with the serial port connection broken and will test the protective board according to the set parameters.

Insert the power cable into the power socket on the back of the tester, turn on the power on the panel and, after the picture is initiated, such a picture as shown below will be displayed on the tester:

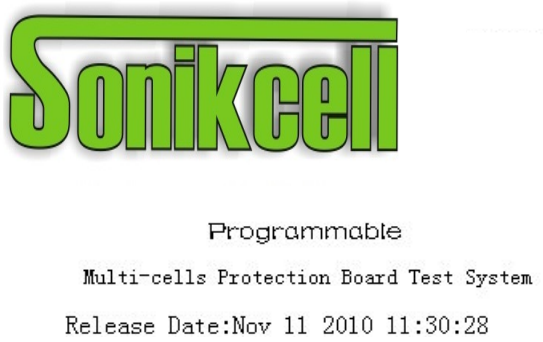

An ordinal number of the tester is displayed on the right-upper corner and it will be used as one of the bases for the warranty of the product.

On the lower the software version number of the product is displayed. The one shown in the figure is 2.30. This company will continue upgrading it and users can download the latest one by themselves or return the tester to this company to let the technician do it (free upgrade within the period of the warranty). See the following “Software upgrade” for the details.

With any of the keys pressed, the tester will enter the testing function selection interface, as shown below:

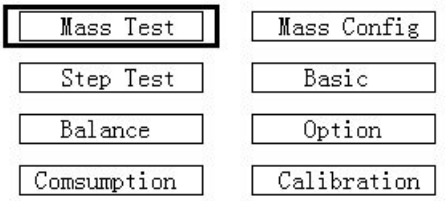

Separately from up to down and from left to right, it comes as:

1. Production test. Test the conventional parameters of the protective board upon the basic mode in the production parameter setting and this testing mode is often used on the production line to quick check the various functional parameters of the protective board.
2. Production parameter. When entering this item, selection among the various parameters and testing items can be set for the production test.
3. Work step test. Test the protective board according to the work steps of test set by the computer on-line software, as the parameters are all set by it at will and often used for the product research, test and analysis.
4. Basic parameters. When entering this item, type of the protective board and the in-series number can be set as well as the necessary checking voltage parameter etc. items related to the said type.
5. Balancing test. When entering this item, the balancing function of the protective board can be individually tested.
6. Optional item. When entering this item, type of language with the tester, treatment to fault test etc. items related with the tester can be set.
7. Test of electric consumption. Through this item, the fluctuation state with the electric consumption of the protective board itself can be individually tested.
8. Equipment correction. Through this menu, correction and adjustment on the voltage, internal resistance and current of the tester can be done so as to make sure of the testing accuracy. (See <<Manual off correction>> for the details)

3. Definition of Interface

Wiring mode of the protective board and wiring position on the panel are shown in the figure below:

Four current wiring terminals are set under the power switch and are separately defined as: B+, P+ and B-, P-. Because a heavier current is required for the test, up to 100A testing current allowed to go through in a short time, so a properly applicable connection conductor shall be used.

Under the four terminals there is a 36-pin connecting socket and all the related voltage testing conductors can be led out of it. The type to connect a 3-string protective board is shown in the figure below:

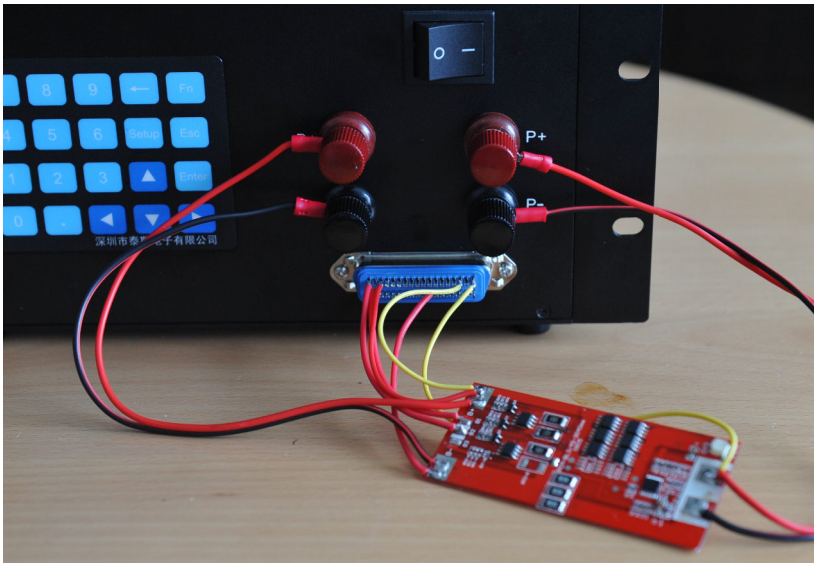

It is recommended, if the welded way of connection can not be used, use connectors or special testing jig and probe to connect the protective board so as to make sure of reliable touch and none of mistouch.

Type D of 36-pin socket is defined as below:

18	17	16	15	14	13	12	11	10	9	8	7	6	5	4	3	2	1
36	35	34	33	32	31	30	29	28	27	26	25	24	23	22	21	20	19

The ordinal number of the jack is kept identical to that of the real jack and plug.

No.	Definition	Description
18	B1	Positive pole of the lowest battery
17	B2	Positive pole of the second battery
16	B3	Positive pole of the third battery
15	B4	Positive pole of the fourth battery
14	B5	Positive pole of the fifth battery
13	B6	Positive pole of the sixth battery
12	B7	Positive pole of the seventh battery
11	B8	Positive pole of the eighth battery
10	B9	Positive pole of the ninth battery
9	B10	Positive pole of the tenth battery
8		Not connected
7	SCL	Communication interface SCL
6	SDA	Communication interface SDA
5	SMBA	Communication interface SMBA
4		Not connected
3	BS+	Used to test the internal resistance of the positive pole, connect an independent lead-in to the B+ end on the protective board
2	CHR+	Independent positive pole charging port, connected to the C+ end (if any) of the protective board
1	PS+	Used to test the internal resistance of the positive pole, connect an independent lead-in to the P+ end on the protective board
36	B11	Positive pole of the 11th battery
35	B12	Positive pole of the 12th battery
34	B13	Positive pole of the 13th battery
33	B14	Positive pole of the 14th battery
32	B15	Positive pole of the 15th battery
31	B16	Positive pole of the 16th battery

30	B17	Positive pole of the 17th battery
29	B18	Positive pole of the 18th battery
28	B19	Positive pole of the 19th battery
27	B20	Positive pole of the 20th battery

26	B0	The negative pole of the lowest battery, connect an independent conductor to B-
25	GND	Distinguish the common end of resistor
24	R1	Distinguish resistor 1
23	R2	Distinguish resistor 2
22		Not connected
21	BS-	Used to test the internal resistance of the negative pole, connect an independent lead-in to the B – end on the protective board
20	CHR-	Independent negative pole charging port, connected to the C – end (if any) of the protective board
19	PS-	Used to test the internal resistance of the negative pole, connect an independent lead-in to the P – end on the protective board

Special note at wiring:

1. Please first preset the related protective board type parameters and the quantity of the nodes in-series, connect the protective board to the tester, or, either the protective board or the tester would be made damaged.
2. For any protective board, B0 lead-in shall be connected directly to the B- weld-disk with a conductor, instead of the nearby B- wiring terminal on the tester, or an error on the voltage test would be caused.
3. For the multi-string protective board with negative pole protection and negative pole over-current, it is not required to connect a conductor to both B+ and P+ terminals. The B+ weld-disk of an n-string protective board being tested shall be connected directly to the corresponding Bn and, in case of a 4-string one, Bn is just B4, in case of a 7-string one, Bn is just B7, and the like.
4. When there is no need to test the internal resistance of the protective board, then the testing lead-ins related to BS+, BS-, PS+, PS- may be not connected. In case of need to test the internal resistance of the positive pole, the lead-ins related to BS+, B+, P+, PS+ shall be connected and, in case of need to test the internal resistance of the negative pole, the lead-ins related to BS-, B-, P-, PS- shall be connected.
5. Please use a thicker conductor, as an over 100mA balanced current may go through the voltage output lead-in when the protective board holds the electric consumption balancing function, so as to reduce the voltage tolerance caused by the voltage drop on the internal resistance of the conductor and, if necessary, please preset the internal resistance parameter. See the last item in the setting of “Basic parameters”.
6. **<Special warning>**, Limited by the internal circuit design of the tester, the maximum bearable voltage input in between terminals B- and P- and terminals B+ and P+ is within 10V only. In the case, being careless, terminal P- or P+ is touched onto other voltage output ends (such as B7, B10 etc.), from which, in the normal output state, a voltage over 30V may be output, thus the tester may get damaged.

4. Key Operation

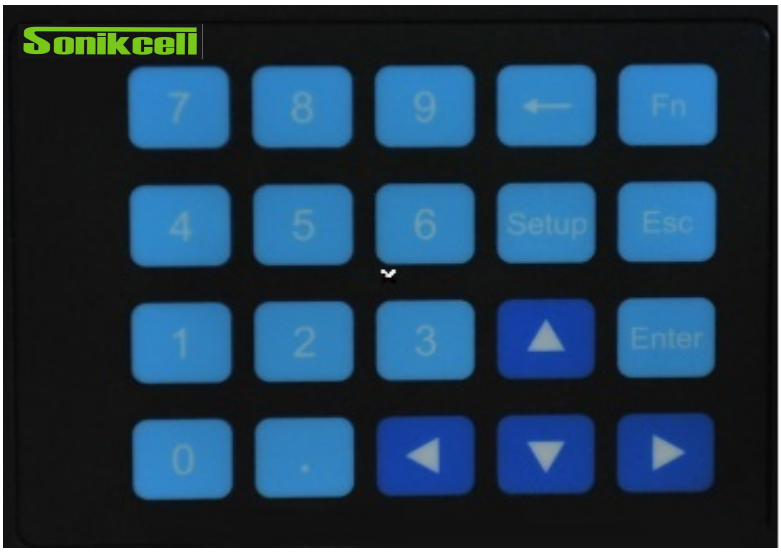

0-9, these 10 numeral keys and the decimal point can be used to directly input numerals.

The leftward delete key can modify the input data.

Fn, the input mode can be switched by press it in the run menu. As to switch the run state over to the input state for changing the parameters or, by means of Fn + numeral key, to initiate the function of single step test.

ESC, cancel key, used to cancel the current operation.

Enter, confirm key, used to confirm the current operation and, in the test state, to initiate a new test process.

Setup, function set key, used to switch the parameter range setting or select the test item, during the production parameter setting.

5. Production Parameters

When entering the production parameter setting interface, the Chinese version as shown below will be displayed:

English version

Model:	12		01
Consumption[uA]	3.600V	100.0	☑
P+/B+ IMP[mR]	1.00	30.00	☐
P-/B- IMP[mR]	1.00	30.00	☑
OC Voltage[V]	4.350 ± 100 mV		☑
OCR Voltage[V]	4.100 ± 100 mV		☑
Balance Voltage[V	4.200 ± 100 mV		☐
Balance Current	35 -80 mA		
OD Voltage[V]	2.500 ± 100 mV		☑
ODR Voltage[V]	3.000 ± 100 mV		☑
OVC[A]	10.00	40.00	☑
SD[mS]	40.0		☐
Resistance	10.000	100.000	☐
OC Test Level	Precision-Fast		
OD Test Level	Precision-Fast		

Press the downward key to turn it to the next page, as shown below:

OVC Test Level	Precision-Fast		
OC Speed[mS]	100		
OCR Speed[mS]	100		
OD Speed[mS]	100		
ODR Speed[mS]	100		
OCD Range[mS]	1	8000	
ODD Range[mS]	1	8000	
OVCD Range[mS]	1.0	100.0	

1. Model: model of the protective board to be tested can be set by means of the computer software, as NP120, NP121-1 etc.
2. 01 on the right-upper corner means this test parameter setting will be stored in No. 1 storing position of the tester. From 00 to 09 in total 10 different test parameters of the protective board can be stored on the tester.
3. 3.600V following the upper limit of the self electric consumption [uA] means the conventional voltage of the protective board to be tested and can be set upon the type of the protective board. The common setting comes as 3.6 or 3.7V and, in case of a phosphoric Fe-Li protective

board, the setting shall be 3.1-3.2V. 100.0 thereafter means the set upper limit of the self electric consumption and, when the limit is over with the self electric consumption of any node, the tester will send out an error warning and dark display will occur on the related result of test.

4. Internal resistance of P+/B+, used to set the internal resistance range between P+ and B+, with both maximum and minimum values settable.
5. Internal resistance of P-/B-, used to set the internal resistance range between P- and B-, with both maximum and minimum values settable.
6. Over-charge voltage, used to set the over-charge voltage parameter of the protective board.
7. Over-charge reset, used to set the over-charge reset voltage parameter of the protective board.
8. Balance initiating voltage, used to set the voltage parameter of balance initiating motion of the protective board.
9. Balance initiating range, used to set the size range of the balancing current
10. Over-discharge voltage, used to set the over-discharge voltage parameter of the protective board.
11. 11. Over-discharge reset, used to set the over-discharge reset voltage parameter of the protective board.
12. Over-current range, used to set the discharge over-current protective current parameter range.
13. Short-circuit delay, used to set the maximum allowed time parameter for the short-circuit protection.
14. Distinguish the resistor, used to set the resistance value range for distinguishing the resistor.
15. There is a symbol "√" or "×" following the range of the above parameter setting, "√" means to test this item while "×" not and to be directly skipped over.
    a) Way to set, by means of the upward and downward keys the value or item to be adjusted can be selected and the selected will be displayed in reversed dark color. In case of the item to be a numeral, it can be input directly through the numeral keys. Press "Setup" key, if need to select an item to be adjusted, and use the upward and downward keys for selection and the leftward and rightward keys to switch "√" or "×" for the control whether to test the item or not.
16. Grade of over-charge test, an optional item testing voltage varying speed for a user to select in the over-charge protection test. During the over-charge test, the voltage applied on the voltage checking input end of the protective board is continually raised and this item is used just for selecting different raising rates, which shall be made slower in case of a longer delay time for over-charge delay protection of the protective board being tested so as to enhance the test accuracy and quicker in case of a shorter time so as to quicken the test and enhance the test efficiency. Usually there are following adjustable test speeds: slowest, slower, slow, slightly slow, normal, slightly quick, quick, quicker, quickest, quick test and self defined stepping time.

a) With the setting from the slowest to the quickest, the test speed becomes quicker in turn form slowly. Usually it can start from quick at selection and, if a normal result can get from the test, then the one in the higher grade can be tried and, if the test fails (the protective motion is still not met even if the scanning voltage scans at the highest voltage), this is possibly due to a too quick test and the speed in a lower grade can be tried.
b) When "Quick test" is selected, the tester will not use the test mode letting the scanning voltage test the protective motion point and, instead, use the way of two-shift step voltages to test if there is protective motion with the protective board. Instead of data, only PASS or FAIL will be displayed in the test result to present if the test is passed or not.
c) The setting parameters in the last three rows can be used to select the self defined stepping time, if necessary to do so.

17. Grade of over-discharge test, this item can be used to set the reducing rate of the test voltage during the over-discharge protection test. See the way of setting for the grade of over-charge test.
18. Grade of over-current test, this item can be used to set the increasing rate of the test current during the over-current protection test. See the way of setting for the grade of over-charge test.
19. OC stepping time (mS), this item will come into effect when "Self defined stepping time" is selected in the grade of over-charge test, with the stepping unit as 1mV and the stepping time freely settable, and, when set as 100mS, it means the over-charge voltage varies by 1mV per every 100Ms interval.
20. OCR stepping time (mS), OCR means the over-charge reset test and will come into effect when "Self defined stepping time" is selected in the grade of over-charge test, with the stepping unit as 1mV and the stepping time freely settable, and, when set as 100mS, it means the voltage varies by 1mV per every 100Ms interval.
21. OD stepping time (mS), this item will come into effect when "Self defined stepping time" is selected in the grade of over-charge test, with the stepping unit as 1mV and the stepping time freely settable, and, when set as 100mS, it means the over-charge voltage varies by 1mV per every 100Ms interval.
22. ODR stepping time (mS), ODR means the over-discharge reset test and will come into effect when "Self defined stepping time" is selected in the grade of over-discharge test, with the stepping unit as 1mV and the stepping time freely settable, and, when set as 100mS, it means the voltage varies by 1mV per every 100Ms interval.
23. Over-charge delay range [mS], here to set the delay time range of over-charge protection.
24. Over-discharge delay range [mS], here to set the delay time range of over-discharge protection.
25. Over-current delay range [mS], here to set the delay time range of over-current protection.

6. Basic Parameters

Usually, after the production parameters are set, the type of the protective board to be tested shall also be set. It needs to enter the basic parameter setting when to do so, as shown in the figure below:

English version

PCM Type:1		
PCM Cells	4	
Cell Initial Voltage	3.600	V
OC Detection Voltage	1.000	V
OCR Detection Voltage	0.200	V
OD Detection Voltage	1.000	V
ODR Detection Voltage	0.200	V
OVC Detection Voltage	1.000	V
Disconnected threshold	>60	%
connected threshold	<40	%
Power resistance	510	R
CONS test range	2mA	
Output Wire Resistance	400	mR

1. Type of protective board: select the type of the forming structure of the protective board, by means of judging the protective MOSFET to be at the positive or negative pole of the battery to distinguish as the positive or negative pole protection, by means of checking both charge and discharge ports to be at one port or two separate ports to distinguish both charge and discharge as being united or not and by means of checking the over-current detection to go through the positive pole MOFET or the negative pole resistor and MOSFET to distinguish as positive or negative pole over-current. By means of combining the above ways, the selectable ways at present are listed below:
   0. Negative pole charge-discharge united/negative pole over-current
   1. Positive pole charge-discharge united/positive pole over-current
   2. Positive pole charge-discharge united/negative pole over-current
   3. Negative pole charge-discharge independent/negative pole over-current
   4. Positive pole charge-discharge independent/positive pole over-current
   5. Positive pole charge-discharge independent/negative pole over-current
   6. Positive pole charge/negative pole discharge/negative pole over-current

   Go on adding for any new types of the protective board structure.

   See the following section “8, Type of protective board” for the details.
2. String quantity of protective board, select the quantity of the in-series nodes of the protective board to be tested, as 3 strings, 4 strings or more.

   <Special warning> The string quantity shall not be wrong set, or the protective board being tested would be made burnt.

3. Here to set the default electric core voltage of the protective board, as 3.6V, 3.7V, or 3.2V of the phosphoric Fe-Li battery. This voltage will be used for the test of self-consumed electricity or internal resistance of the protective board, as the default electric core voltage.
4. MOSFET over-charge protection checking voltage, means the voltage applied on both ends of MOSFET when to test the MOSFET of the protective board to be conducted or not, with the range set as 0-5V, but usually as 1.0V.
5. MOSFET over-charge reset checking voltage, same noted as above and usually set as 0.1-0.2V.
6. MOSFET over-discharge protection checking voltage, same noted as above and usually set as 1.0V.
7. MOSFET over-discharge reset checking voltage, same noted as above and usually set as 0.1-0.2V.
8. MOSFET over-current protection checking voltage, same noted as above and usually set as 1.0V.
9. MOSFET off-check voltage threshold value, means, if the voltage on both ends of MOSFET is bigger than this set value in the On or Off check of the protective board, then MOSFET is judged as Off. This value is judged with the percentage of the checking voltage and usually set as 50%.
10. MOSFET conduction-check voltage threshold value, means, if the voltage on both ends of MOSFET is smaller than this set value in the “On” or “ Off” check of the protective board, then MOSFET is judged as On. This value is also judged with the percentage of the checking voltage and usually set as 20%.
11. MOSFET check source impedance, means the equivalent impedance R on the checking voltage in the On or Off check of MOSFET, only two kinds can be selected at present: 51 and 510ohm.
12. Self-consumed electricity test shift, for users to select the test shift to be used, according to the possible range of it, as 200uA or 2mA shift.
13. Setting of equivalent impedance with the voltage output lead-in, it can be set as the one in the actual use so as to for the tester, through the software algorithm, to counteract a bigger voltage error caused by the impedance with the balancing current test lead-in and approximately decided by means of testing the internal resistance value of an external conductor or estimating the difference between the set output voltage with the known current and the actual one.

The principle to actually check On or Off of MOSFET of the protective board is shown below:

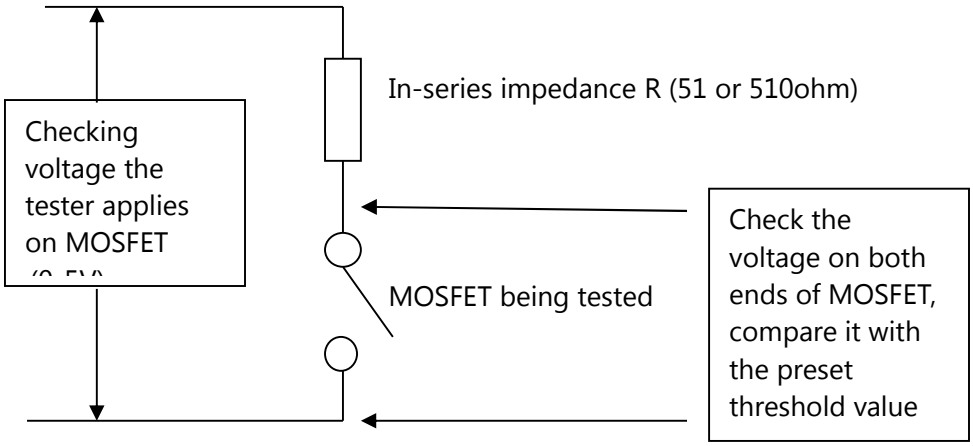

By means of the shown principle, the tester checks On or Off state of MOSFET of the protective board. The related MOSFET will be off in case of the over-charge and over-discharge protection motions and the tester judges if it is off by checking the voltage on both ends of it.

Normally, the default setting can be used to check the said On or Off state and, in case of a special protection IC or a special design, as: some of the protection IC will require, at the test of over-charge or over-discharge reset, the voltage applied on the ends of MOSFET not to be over 0.1V, then the checking voltage shall be set below 0.1V, but better not to be excessively small, as ADC of the tester is unable to distinguish an extra-small voltage difference and thus avoiding any error.

7. Type of Protective Board

Type 0, negative pole protection/negative pole over-current/charge-discharge united

This type means, MOSFET protective element control is output from the negative pole, the current checking element is also on the negative pole and both charge and discharge are output from one port. The formed circuit is shown below:

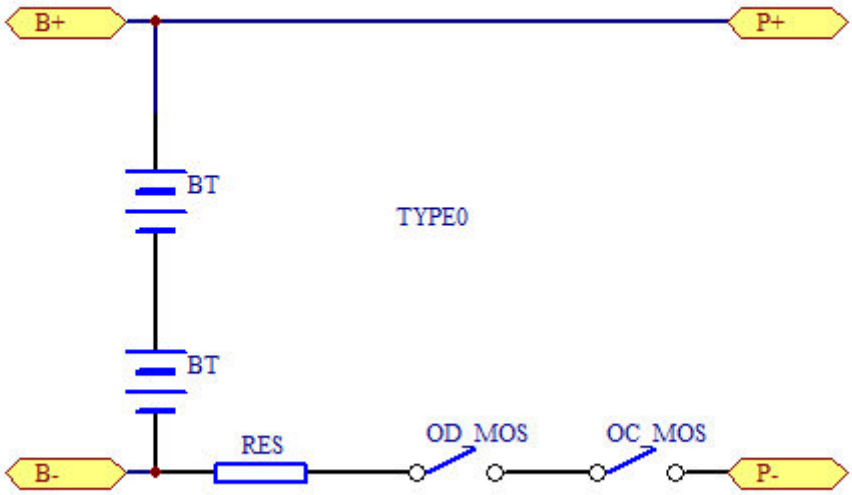

This type of circuit is usually used for a common single-node or dual-node protective board as well as a multi-string heavy current one formed with a self designed circuit and the common protection IC are SEIKO S8261, Ricoh R5460, DW01 and ……

BT means the Li battery electric core, can be single node or in-series structure of multiple electric cores

RES means the over-current checking element on the circuit board, can be an independent resistor or replaced with the conductive internal resistor of the discharge protection MOSFET.

OC_MOS, means the MOSFET of over-charge protection and, normally, this MOSFET is closed and conducted and, in case of a charge over-voltage, will get off under the control of the protective IC to form an opened-circuit to break a possible charge current.

OD_MOS, means the MOSFET of over-discharge protection and, normally, this MOSFET is closed and conducted and, in case the discharge voltage is lower than the over-discharge protective voltage or in case of a discharge over-current and a short-circuit , will get off under the control of the protective IC to form an opened-circuit to break a possible discharge current.

Type 1, positive pole protection/positive pole over-current/charge-discharge united, as shown below:

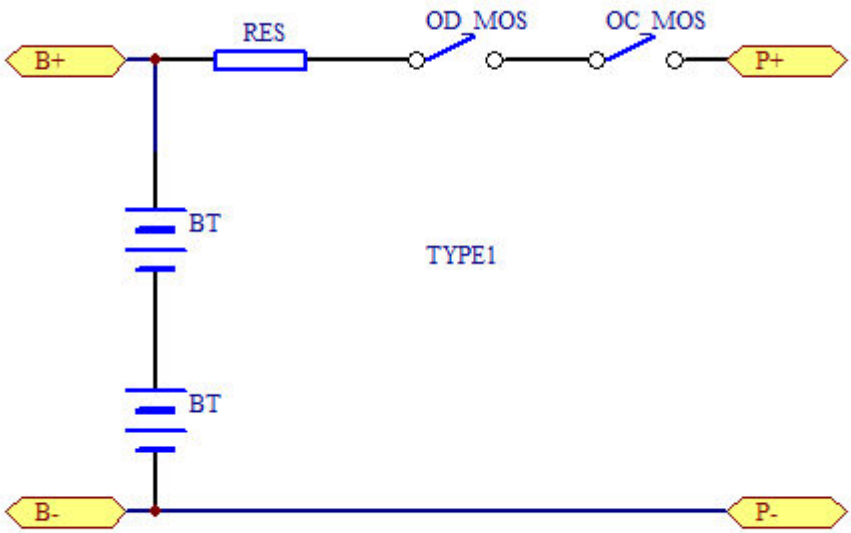

This circuit is often used with the protective circuit of 3-4 nodes and the common protective IC: MM1414 series of MITSUMI

Type 2, positive pole protection/negative pole over-current/charge-discharge united, as shown below:

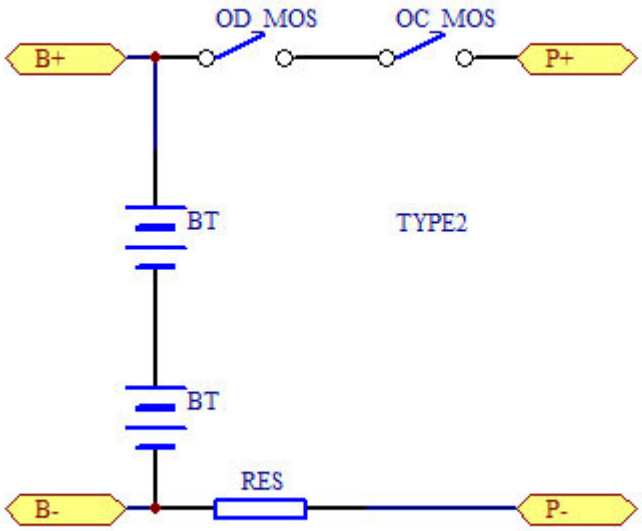

This circuit is often used with the protective board of 3-4 strings and the common IC: SEIKO S8254 etc.

Type 3, negative pole protection/negative pole over-current/charge-discharge united

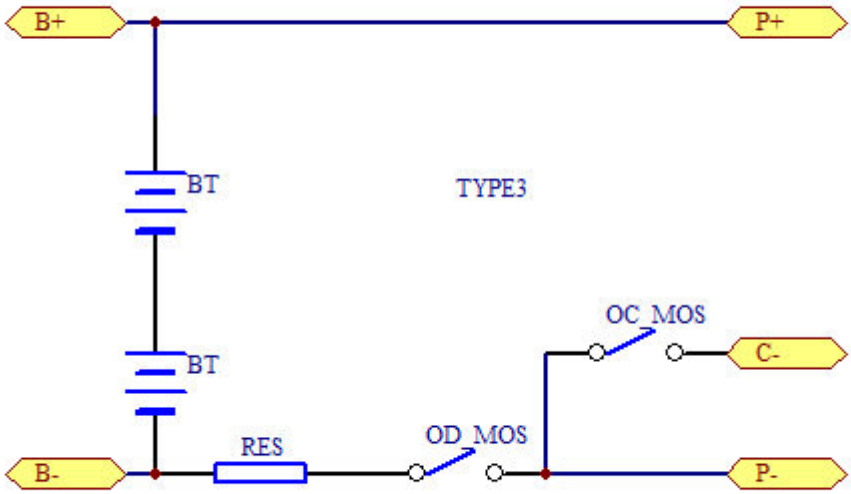

This circuit is often used with the heavy current protective circuit of multiple strings (over 4 strings) and, actually, both over-charge and over-discharge MOSFET can be in-series structured, as shown in the above figure, or in-parallel, as shown below:

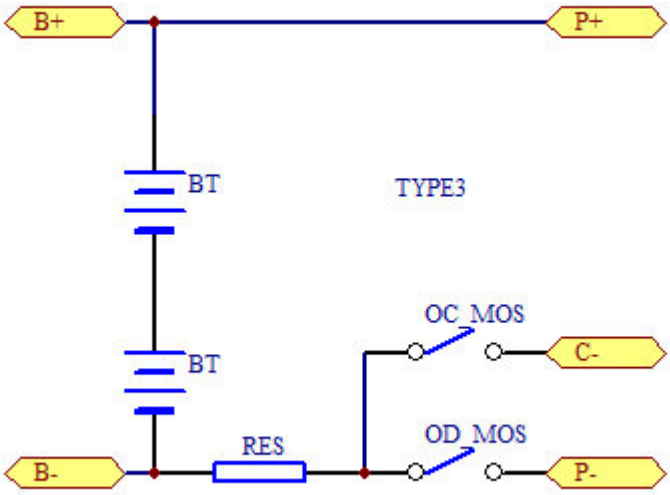

Both test connection and process of these two types of circuit on the tester are identical.

Type 4, positive pole protection/positive pole over-current, positive pole charge independent

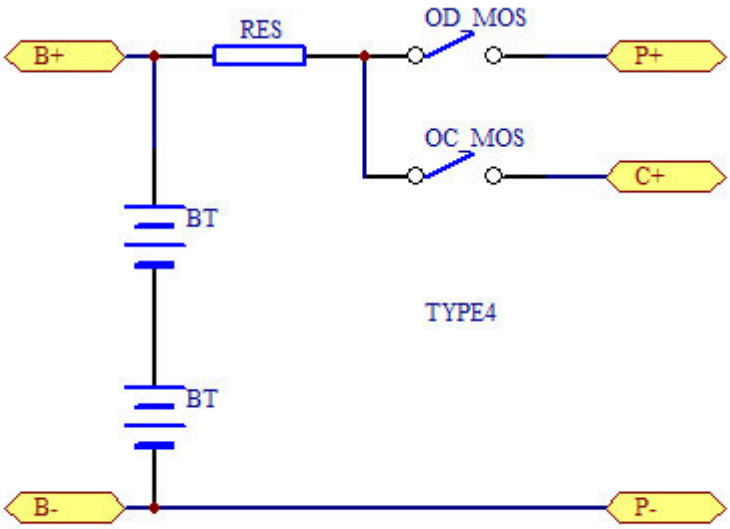

Type 5, positive pole protection/negative pole over-current/positive pole charge independent

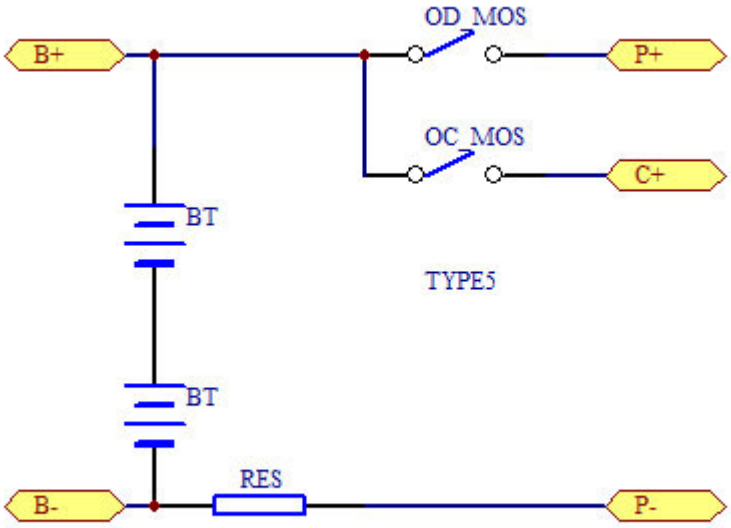

Type 6, positive pole charge/negative pole discharge/negative pole over-current

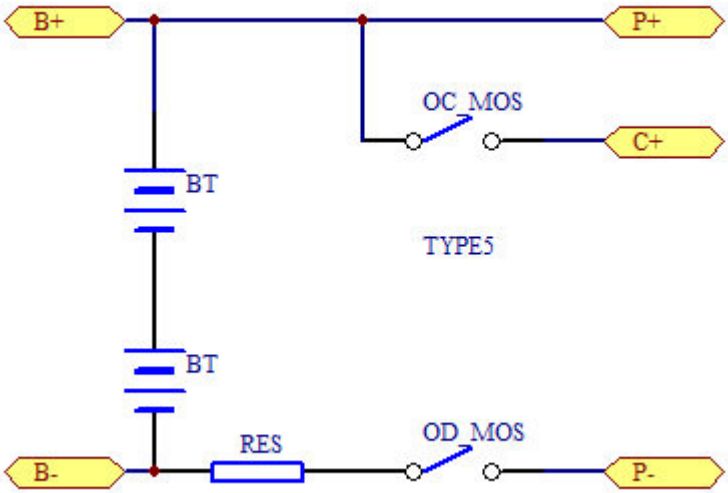

Often used for the protective board with some electric tools, adopt a small current for charge, the charge protection adopts P-MOS control and the discharge protection adopts N-MOS control for the case of discharge with a heavy current.

8. Optional Items

Select the “Option” function as below:

English version

Language	English	
Buzzer	ON	
Online test	No	
Test fail	Stop	
OCD Timeout	3000	mS
ODD Timeout	3000	mS
OVC Timeout	100	mS
Blance Timeout	1500	mS
Step begin Delay	30	mS
Release Chr/Dis	35	mS
Release Open Delay	35	mS
Step end Delay	20	mS

Item setting

1. Language: select the displayed language, available with “Simple Chinese” and “English” two kinds at present
2. Buzzer: select “ON” or “OFF”
3. On-line test: select “Yes” or “No” and, in case of “Yes”, then connect the tester to a computer via the interface, or no way to test normally.
4. When the test fails, select “End test” or “To next”, the latter is usually recommended, in the product test or verification phase, so as to get all the test results, no matter passing or not. While in the actual production test, the former is recommended so as to quicken the test and, once any item is tested unsuccessfully, end the test at once.
5. Over-time of over-charge delay: used to set the maximum over-charge delay test time and, in case of the time to be over, then the tester will report an error. For the protective IC with the said time no more than 1000mS, setting it as 2000mS is enough, but for some special IC with the said time up to 5s, a longer time is required to be set.
6. Over-time of over-discharge delay: used to set the maximum over-discharge delay test time and, in case of the time to be over, then the tester will report an error.
7. Over-time of over-current delay: used to set the maximum over-current delay test time and, in case of the time to be over, then the tester will report an error.
8. Work step initiating delay, the time for the program to wait before each of the work steps starts.
9. Reset charge-discharge time, to test the motion in the next step after every circuit protection motion by the protective board, once forceful charge or discharge on the protective board is

necessary sometimes so as to activate and reset it, this time is just for the control of the time of this motion.

10. Off time at reset, as abovementioned, to test the motion in the next step after every circuit protection motion by the protective board, the tested port (P- or P+) is required to be broken sometimes so as to activate and reset it, this time is just for the control of the time of this motion. When “Protective board is reset, no way to go to the next test” is displayed on the tester, try to enlarge the interval of this time. This time can be set as 0 to cancel this motion in order to avoid excessively frequent motion of the relay, provided that the test can still be successfully finished.
11. Work step ending delay, the time for the program to wait when every work step tends to be ended.

9. Production Test

As abovementioned, to test one protective board, usually the steps below need to be taken:

1. Select type and node quantity of the protective board through “Basic parameters”.
2. Select on-line test (connecting a computer) or not and terminating condition of error through “Option”.
3. Select the test items and the passing range of the protective board through “Production parameters”.
4. Thereafter, connect all the conductors to the tester according to the interface definitions of the protective board.
5. Then enter “Production test” and use an individual start key or Enter key to start the test.

The test result display interface is shown below

Cell	B1	B2	B3	B4	Unit
CONS	19.9	24.9	22.0	0.0	uA
IMP	P+/B+	14.18	P-/B-	0	mR
OCD	876		ODD	330	mS
OC	4.347	4.330	4.341	0	V
OCR	4.098	4.066	4.104	0	V
OD	2.405	2.399	2.421	0	V
ODR	3.034	3.021	3.038	0	V
OVC	2.5mS	10.43A	S D	0	mS
BL-C	42.1	44.2	41.3	0	mA
RES	0	KR	PASS		
Pass	239				
Fail	23				

Mass Test

All Test complete!20.482S

The above diagram shows the complete test results of a 3-string protective board and all the test are successfully passed.

1. The power consumption column shows the self consumed electricity of the protective checking circuit with every node independent and the values of the self consumed electricity from the lowest string to the highest one are 19.9, 24.9 and 23uA.
2. Internal resistance column, display the internal resistance of the testing positive pole (P+/B+ port) to be 14.19mR, the one on the negative pole is not tested and displayed as 0.
3. Charge delay, means the test result shown in the figure is 866mS at over-charge protection delay. (This result will affect the over-charge protection voltage test result)
4. Discharge delay, means the test result shown in the figure is 328mS at over-discharge protection delay. (This result will affect the over-discharge protection voltage test result)

5. Over-charge, means the over-charge protection voltage, the protective voltages of the three strings from low to high shown in the figure are 2.406, 2.399, 2.421V, satisfying the setting conditions of the test.
6. Charge reset, means the over-charge protection reset voltage, the reset voltages of the three strings from low to high shown in the figure are 4.097, 4.067, 4.104V, satisfying the setting conditions of the test.
7. Over-discharge, means the over-discharge protection voltage, the protective voltages of the three strings from low to high shown in the figure are 2.406, 2.399, 2.421V, satisfying the setting conditions of the test.
8. Discharge reset, means the over-discharge reset voltage, the reset voltages of the three strings from low to high shown in the figure are 3.040, 3.018, 3.035V, satisfying the setting conditions of the test.
9. Over-current, means over-current protection test, separately test the over-current delay and protection current values, 2.6mS means the over-current delay time is 2.6mS and the over-current protection current is 10.54A.
10. Short circuit delay, means short circuit protection delay. In the actual test, a DC power is used to directly discharge the current checking element of the protective board being tested and the maximum discharge current is close to the upper limit of the over-current protection current range of the tester. As: a 4S40A tester, the maximum current of it at short circuit is close to 40A, the said delay time is just the short circuit (or over-current) protection time tested under this current.
11. Balanced current, means the balanced current. Seen from the figure, the balanced currents of the three strings of the protective board are 42.4, 44.2, 40.4mA.
12. Resistor, means the test to distinguish resistor, not tested in the figure.
13. Counting, means the function as a counter only, the first is the passing times and the second is the times of the total tests. It is clearable only through restarting the tester or via the software of the precedent computer.
14. Time of test, means the time spent for the complete test of the protective board.
15. The oscilloscope pattern on the right-lower corner means the actually varying waveform of the output voltage from some string being tested currently.

The test results of the protective board of 1-4 strings can be shown in the figure and, in case of more strings, the test results of them can be seen by mean of switchover via the leftward and rightward keys.

Cell	B1	B2	B3	B4	Unit
CONS	19.9	23.9	22.0	0.0	uA
IMP	P+/B+	14.25	P-/B-	0	mOHM
OCD	844		ODD	318	mS
OC	4.349	4.331	4.341	0	V
OCR	4.100	4.067	4.104	0	V
OD	2.405	2.397	2.420	0	V
ODR	3.034	3.019	3.034	0	V
OVC	3.1mS	10.52A	S D	0	mS
BL-C	42.1	44.2	41.3	0	mA
RES	0	KOHM	FAIL		
Pass	249				
Fail	27				

Mass Test

Test Fail!

As shown in the above figure, the process of one failed test, the failed item will be shown with the background in black color, here the discharge reset voltage (3.300) test of B2 string is indicated failed, as being over the allowed range. At this moment, try to test it again and, in case of the same mistake, then this item can be judged abnormal.

It needs to press the start key or Enter key again if need to retest it.

10. On-line Software

The tester is attached with the on-line software, with which, parameter setting and test result memory can be done on the lined computer.

After the software is installed, click the sole executive file under the software installation directory (usually this file is named as MPT20S100A.exe)

The run environment for this software is the operation system over Windows XP and the run environment over Net FrameWork 2.0 must be installed.

1. Connect the protective board tester to a computer via the serial port and turn on the power of the tester. There would be no way to go to the next step if without such connection.
2. Upon the definition of the serial port to be actually connected, select the serial port (as COM1 or COM2) and then click “Link” button.
3. Also try to select “Auto Link” button, if the serial port can not be decided, and the software will automatically search all ones till the normal connection.

After successful connection between both computer and tester, the picture as below will be shown:

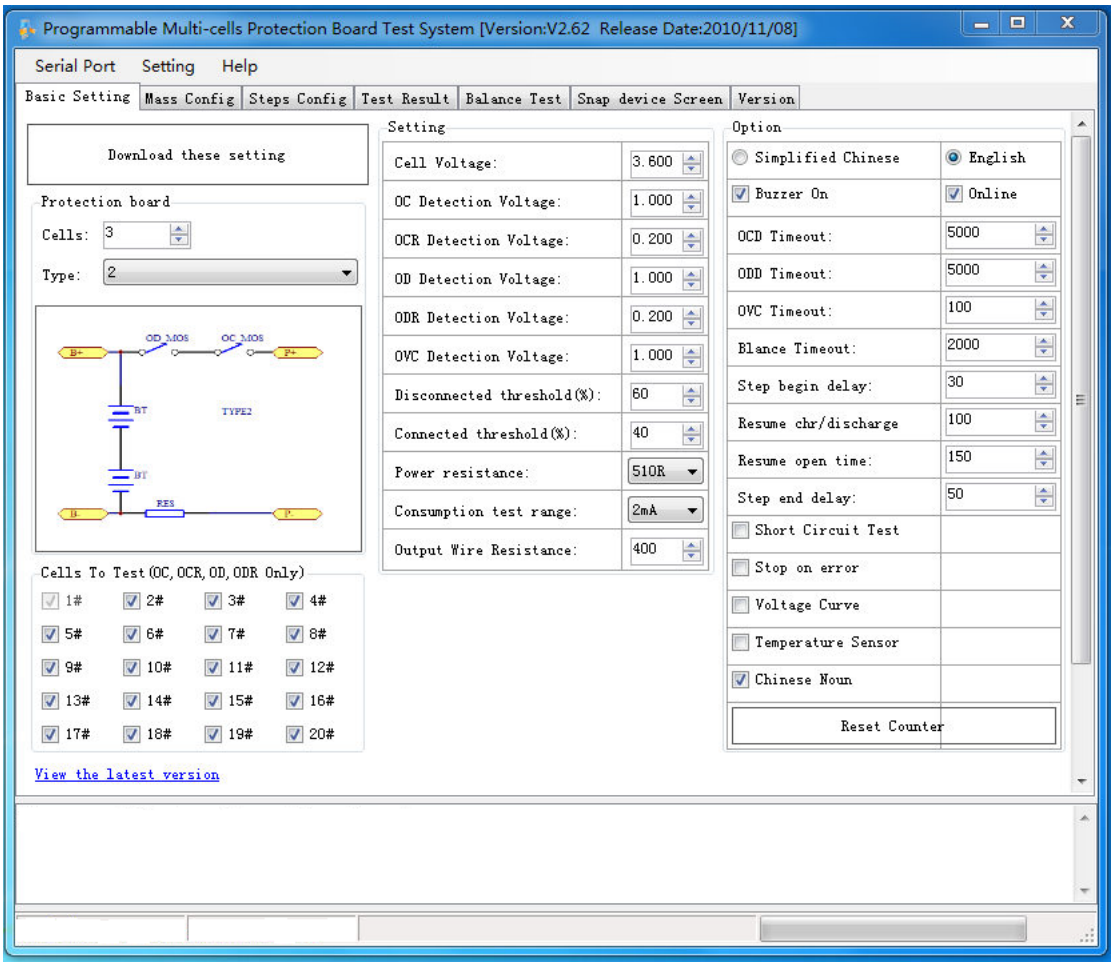

On the basic parameter page, the definitions of the most set items are identical to those of the basic parameters on the tester, please refer to the section of “Basic setting”.

Strings to be tested (OC, OCR, OD, ODR valid)

Here test of all the strings can be selected, or only some special ones. Inside of which, the first string (1#) must be tested in every test while the following ones are optional, as: only to test 1#, 3#, 5# string etc. and, if all the selection blocks are selected, then all the strings will be tested, as; for a 4-string protective boar, the test will be done from the first string to the fourth one.

On the “PCB cells” page, quantity of string of the protective board can be selected. Here select the in-series number of the to-be-tested protective board in connection with the electric core, for instance, 3.6V protective board is just 1 string, 7.2V is just 2 strings.

<Special warning> It shall be done, before testing a new type of protective board, to carefully check if the related parameters have been set. When the 16- or 20-string mode is set and taken directly to test a 4-string protective board, the voltage applied on B+ port will be greatly over the one bearable by the protective board, so it will be possibly made damaged.

7 kinds of different forming types of protective board can be selected and divided upon the different places where MOSFET switch and over-current checking element stay at and the state for both charge and discharge ports to be separated or independent.

After all the parameters are set, they will be downloaded to the tester through clicking on the "Download the parameters on this page" button on the left-upper corner.

When clicking the page of “Production test parameters”, the software displayed page comes as below:

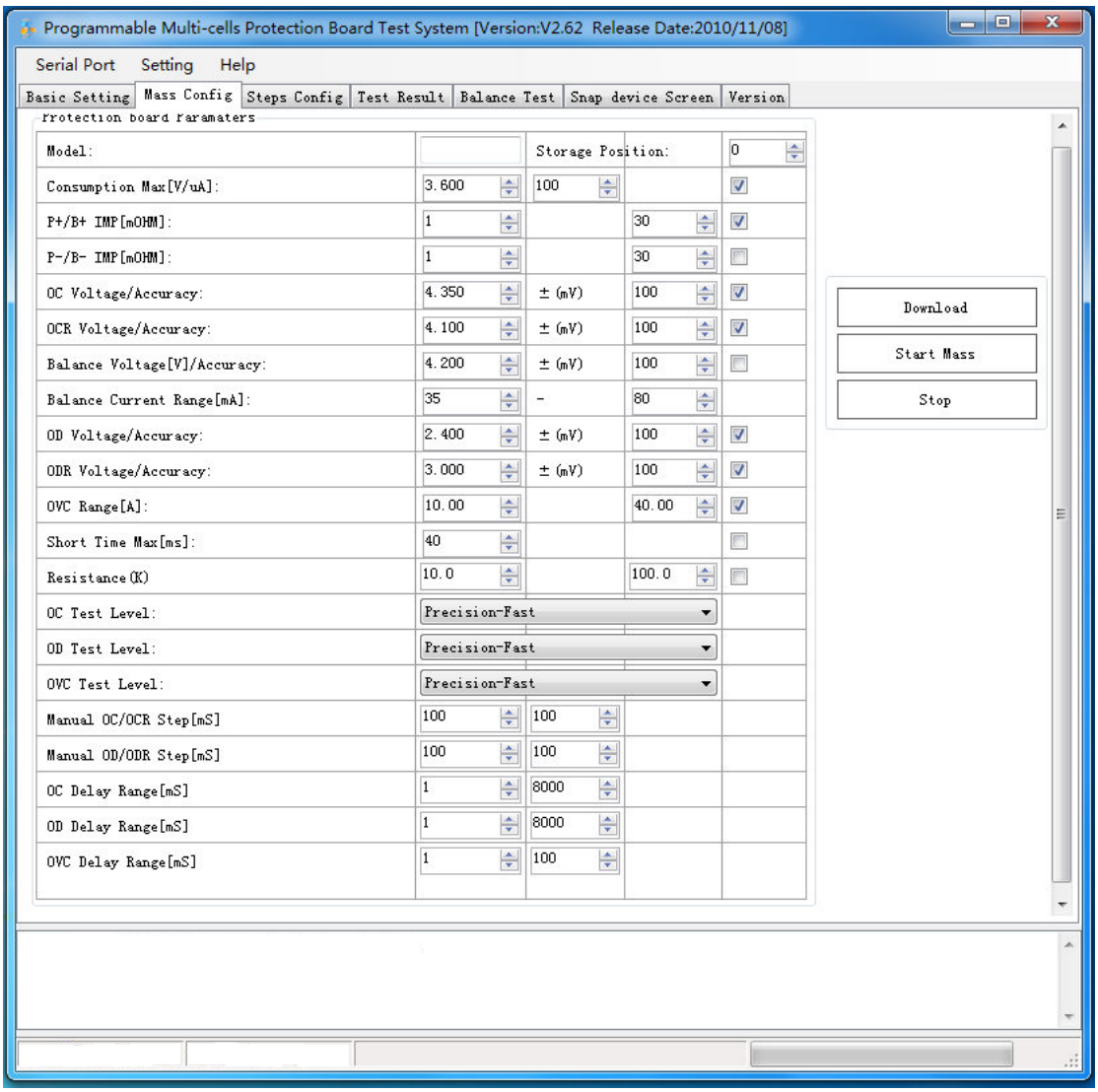

After all the parameters are set, they will be downloaded to the tester through clicking on the “Download” button.

After the connection between the protective board and the tester, the production test can be started by clicking the “Start test” button.

By clicking “Cease test” button during the test, the current test can be ceased.

11. Test of Work Step

By clicking the page of “Analyze & test work step”, the test process of the protective board can be set, and the test speed, test condition etc. as well.

Each of the work steps can be combined at will and one of the work steps can be tested repeatedly for several times, but for the work steps in one type, maximum 10 times of test are allowed, such as the self-consumed electricity under different voltages, as shown below:

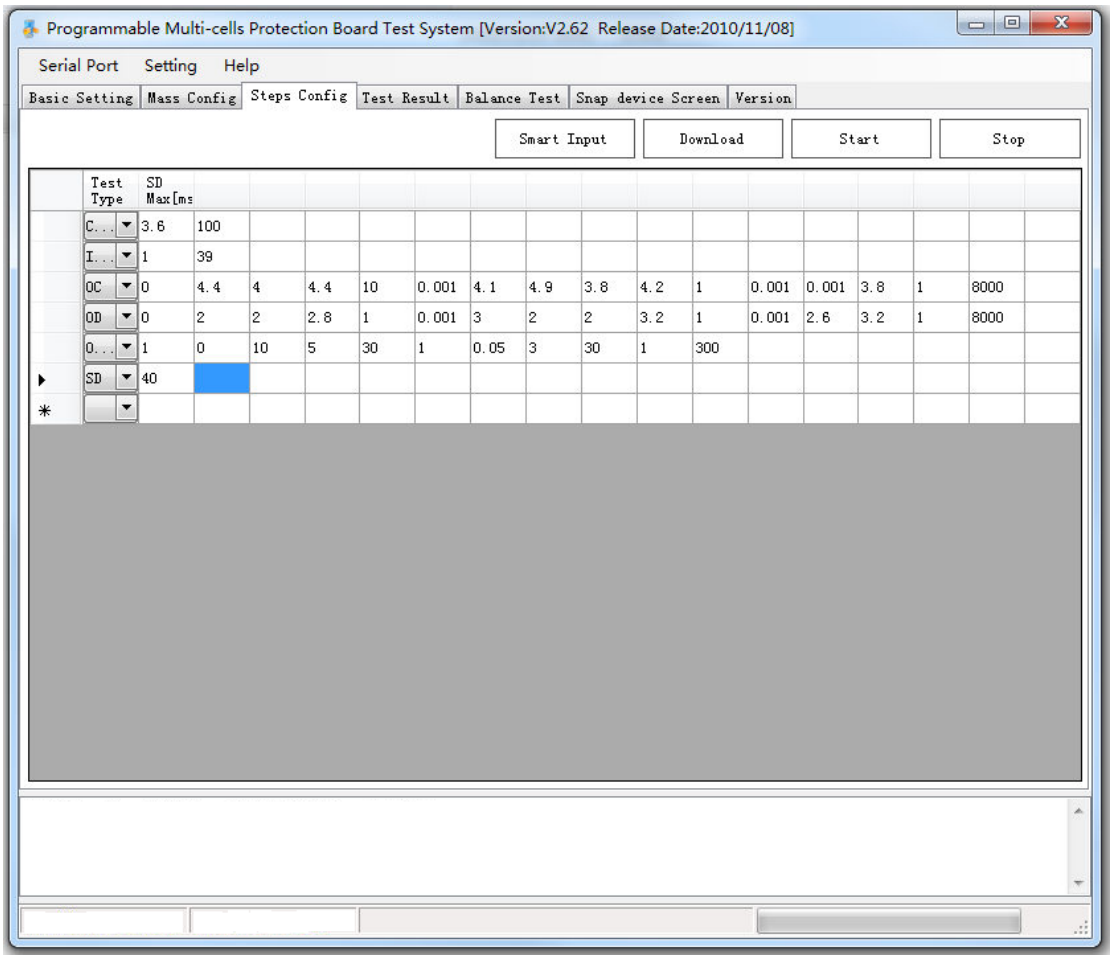

“Intelligent input” can form the testing work steps for over-charge or over-discharge protection by means of setting basic over-charge o and over-discharge parameters.
“Download work step” can download the work steps set below into the tester.
“Start test” can initiate one normal test.
“Cease test” can cease the current test process.

Type of work steps, the following 7 kinds of testing work steps are available at present:

1) CONS, test of self-consumed electricity, the parameters to be set include:
   a) Test Voltage, means the voltage applied on each string of the protective board at test, defaulted as 3.6V.
   b) Cons Min means the minimum value of the self-consumed electricity
   c) Cons Max means the maximum value of the self-consumed electricity
2) IMP+, test the conduction internal resistance between P+ and B+, the parameters to be set include:
   a) IMP+ Min minimum value of the internal resistance
   b) IMP+ Max maximum value of the internal resistance
3) IMP-, test the conduction internal resistance between P- and B-, the parameters to be set include:
   a) IMP- Min minimum value of the internal resistance
   b) IMP- Max maximum value of the internal resistance

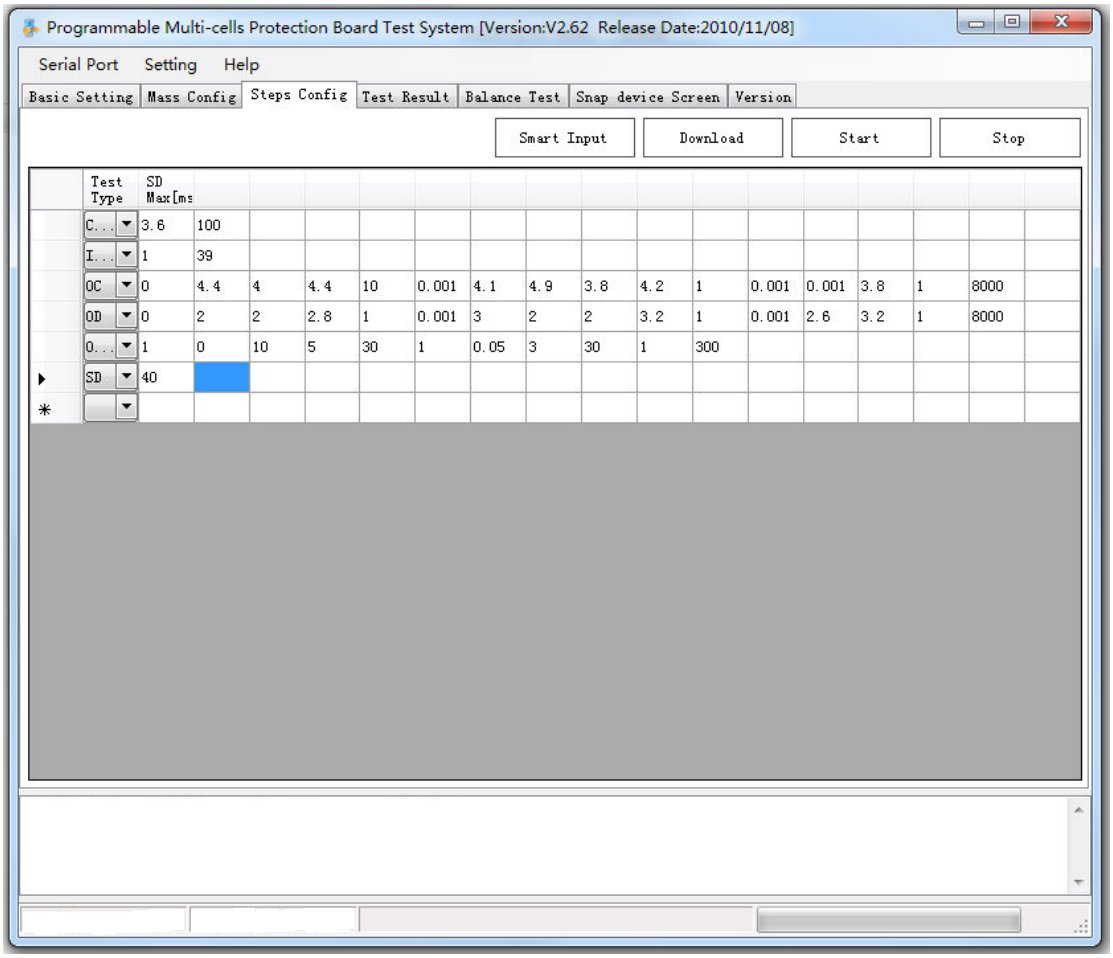

4) OC test, test the over-charge delay, over-charge protection voltage and over-charge reset voltage, the parameters to be set include:
   a) OCD[0:Auto], setting of over-charge delay time, here the known over-charge protection

delay time or 0 can be input and the tester will automatically test it.

b) OCD Test Voltage, setting of over-charge delay testing voltage, the voltage applied on every string electric core in order to test over-charge protection delay and shall be over the possible over-charge protection voltage, as: set as 4.6V.
c) OC Min, the minimum value allowed by the test result of over-charge protection voltage
d) OC Max, the maximum value allowed by the test result of over-charge protection voltage
e) OC speed, setting of over-charge voltage scanning speed, means with what time interval for the voltage to get increased by one set unit (OC Step), here the unit is ms. If the setting is 5, then the applied voltage gets increased by one unit every 5mS. The bigger the value is set, the quicker the test, but the corresponding test accuracy will be lowered, on the contrary, the smaller, the slower and enhanced, but the lowest setting can be 1mS only.
f) OC Step, the stepping value increased with the over-charge voltage scan, means the increased value of the voltage per every interval (decided by OC Speed), the unit is V. When the setting is 0.001, then the voltage will be increased by 0.001V per every fixed interval.
g) OC Scan Begin, the voltage initiating point when over-charge voltage scanning starts
h) OC Scan End, the point at which the over-charge voltage scanning ends.
i) OCR Min, the minimum value allowed by the test result of over-charge reset voltage
j) OCR Max, the maximum value allowed by the test result of over-charge reset voltage
k) OCR speed, setting of over-charge reset voltage scanning speed, means with what time interval for the voltage to get decreased by one set unit (OC Step), here the unit is ms. If the setting is 5, then the applied voltage gets decreased by one unit every 5mS.
l) OCR Step, the stepping value decreased with the over-charge voltage scan, means the decreased value of the voltage per every interval (decided by OC Speed), the unit is V. When the setting is 0.001, then the voltage will be decreased by 0.001V per every fixed interval.
m) OCR Scan offset, used to set the voltage initiating point when the over-charge reset voltage scanning starts. Actually it is relied upon the current real voltage. When over-charge protection is just tested in the prior phase and the voltage stops at one point, then, at the over-charge reset test now, the current voltage will be enhanced by one fixed displacement, which is set by OCR Scan offset.
n) OCR Scan End, the point at which the over-charge reset voltage scanning ends.

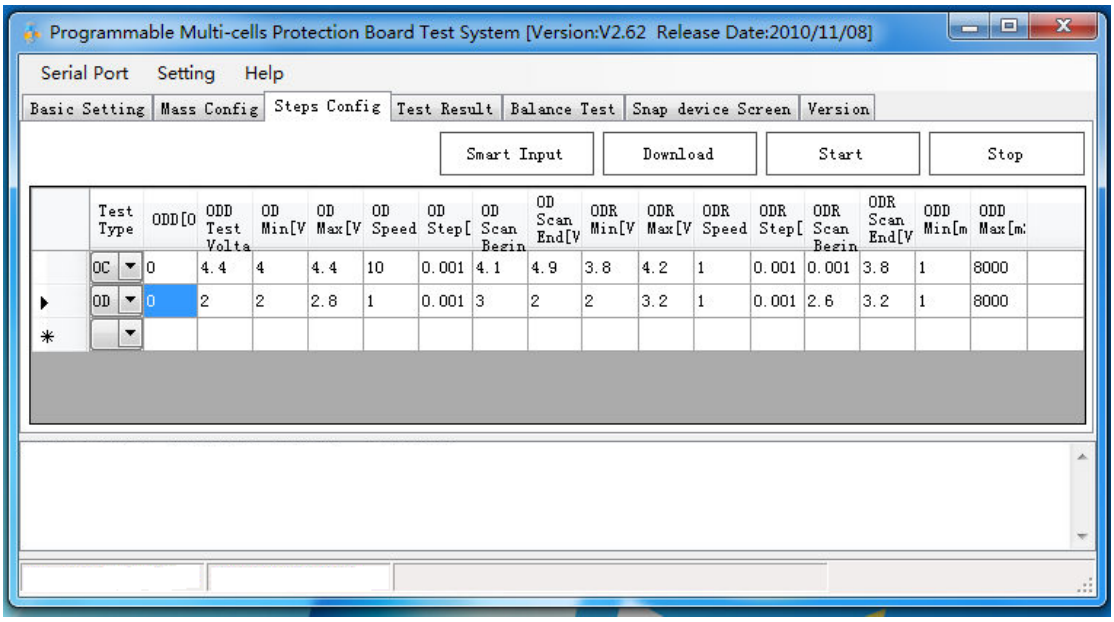

5) OD test, test the over-discharge delay, over-discharge protection voltage and over-discharge reset voltage.
   a) ODD[0:Auto], setting of over-discharge delay time, here the known over-discharge protection delay time or 0 can be input and the tester will automatically test it.
   b) ODD Test Voltage, setting of over-discharge delay testing voltage, the voltage applied on every string electric core in order to test over-discharge protection delay and shall be over the possible over-discharge protection voltage, as: set as 2.2V.
   c) OD Min, the minimum value allowed by the over-discharge protection voltage
   d) OD Max, the maximum value allowed by the over-discharge protection voltage
   e) OD speed, setting of over-discharge voltage scanning speed, means with what time interval for the voltage to get increased by one set unit (OD Step), here the unit is ms. If the setting is 5, then the applied voltage gets increased by one unit every 5mS.
   f) OD Step, the stepping value increased with the over-discharge voltage scan, means the increased value of the voltage per every interval (decided by OD Speed), the unit is V. When the setting is 0.001, then the voltage will be increased by 0.001V per every fixed interval.
   g) OD Scan Begin, the voltage initiating point when over-discharge voltage scanning starts
   h) OD Scan End, the point at which the over-discharge voltage scanning ends.
   i) ODR Min, the minimum value allowed by the over-discharge rest voltage
   j) ODR Max, the maximum value allowed by the over-discharge rest voltage
   k) ODR speed, setting of over-discharge reset voltage scanning speed, means with what time interval for the voltage to get decreased by one set unit (OD Step), here the unit is ms. If the setting is 5, then the applied voltage gets decreased by one unit every 5mS.
   l) ODR Step, the stepping value decreased with the over-discharge voltage scan, means the decreased value of the voltage per every interval (decided by OD Speed), the unit is V.

When the setting is 0.001, then the voltage will be decreased by 0.001V per every fixed interval.

m) ODR Scan offset, used to set the voltage initiating point when the over-charge reset voltage scanning starts. Actually it is relied upon the current real voltage. When over-discharge protection is just tested in the prior phase and the voltage stops at one point, then, at the over-discharge reset test now, the current voltage will be lowered by one fixed displacement, which is set by ODR Scan offset.

n) ODR Scan End, the point at which the over-discharge reset voltage scanning ends.

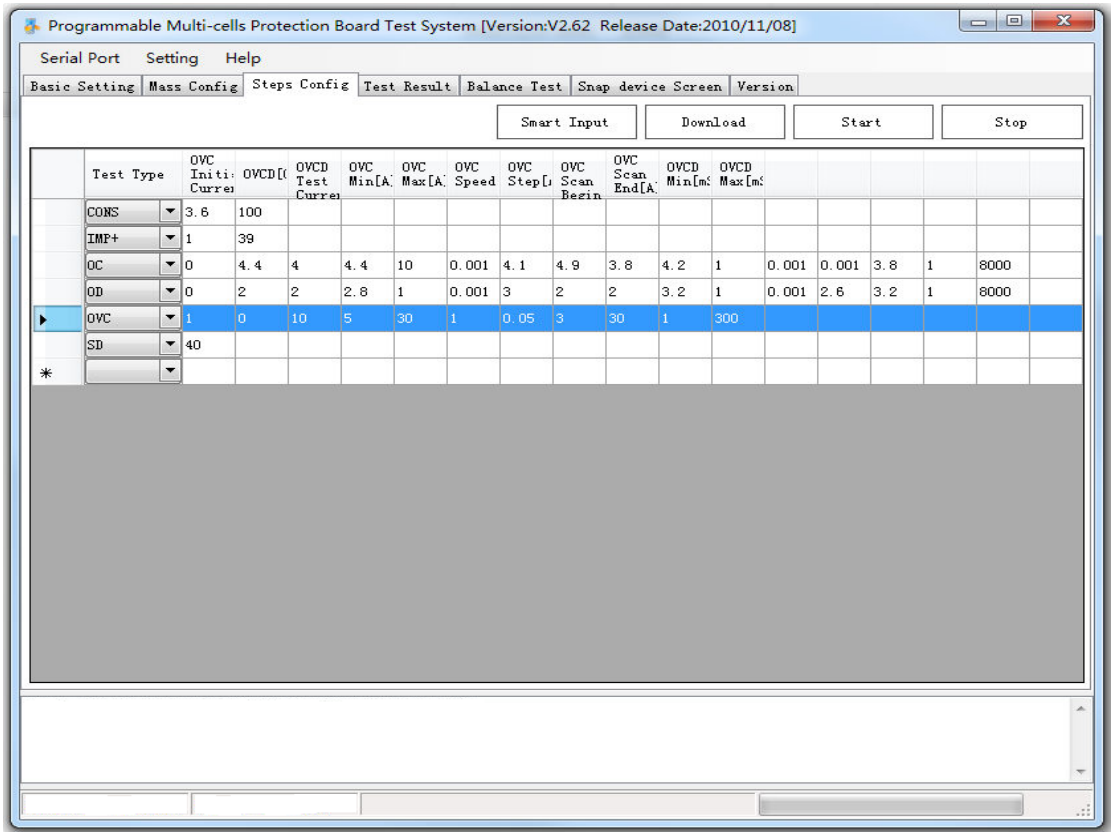

6) OVC over-current test, test the over-current protection point of the protective board, the parameters to be set include:

a) OVC Initial, used to set the conduction initiating current of the test, equivalent to a very small initial current to let MOSFET of the protective board kept at the conducted state, the default value is 1A and maximum settable as 3A.

b) OVCD[0:Auto], setting of over-charge delay time, here the known over-current protection delay time or 0 can be input and the tester will automatically test it.

c) OVCD Test Current, the testing current of the over-current delay time, usually it shall be over the possible over-current protection value and directly applied on the over-current checking element of the protective board to measure the protection time of it.

d) OVC Min, the minimum value allowed by the over-current protection current

e) OVC Max, the maximum value allowed by the over-current protection current

f) OVC speed, setting of over-current scanning speed, means with what time interval for the current to get increased by one set unit (OVC Step), here the unit is ms. If the setting is 5, then the applied voltage gets increased by one unit every 5mS.

g) OVC Step, the stepping value increased with the over-current scan, means the increased value of the current per every interval (decided by OVC Speed), the unit is A. When the setting is 0.001, then the current will be increased by 0.001A per every fixed interval.

h) OVC Scan Begin, the initiating point when over-current protection current scanning starts

i) OVC Scan End, the ending point when over-current protection current scanning ends.

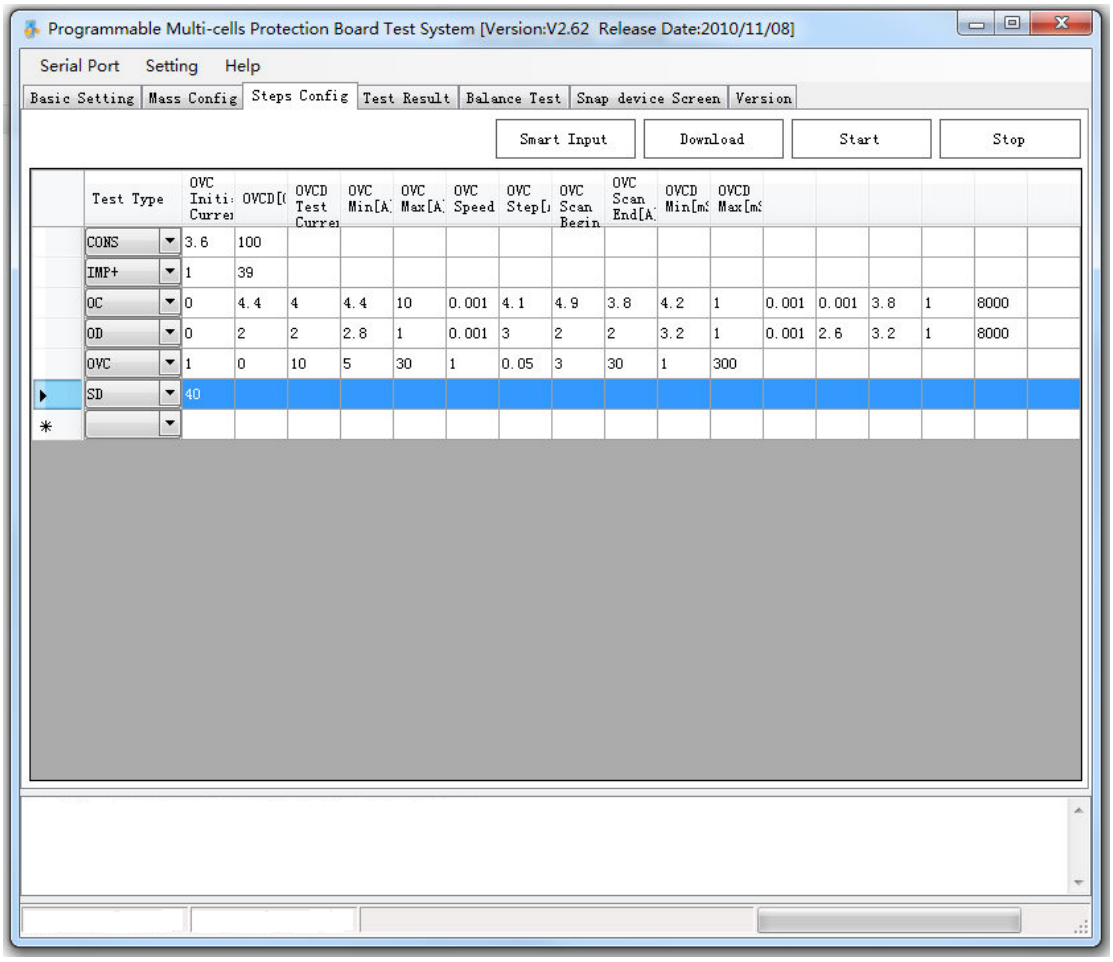

7) SD short circuit test, only set the maximum delay time of short circuit.

Intelligent input

To simplify the way of setting for the sake of operation at the over-charge test OC and over-discharge OD, “intelligent input” mode is made and, when the button of it is pressed, the picture as below will be shown:

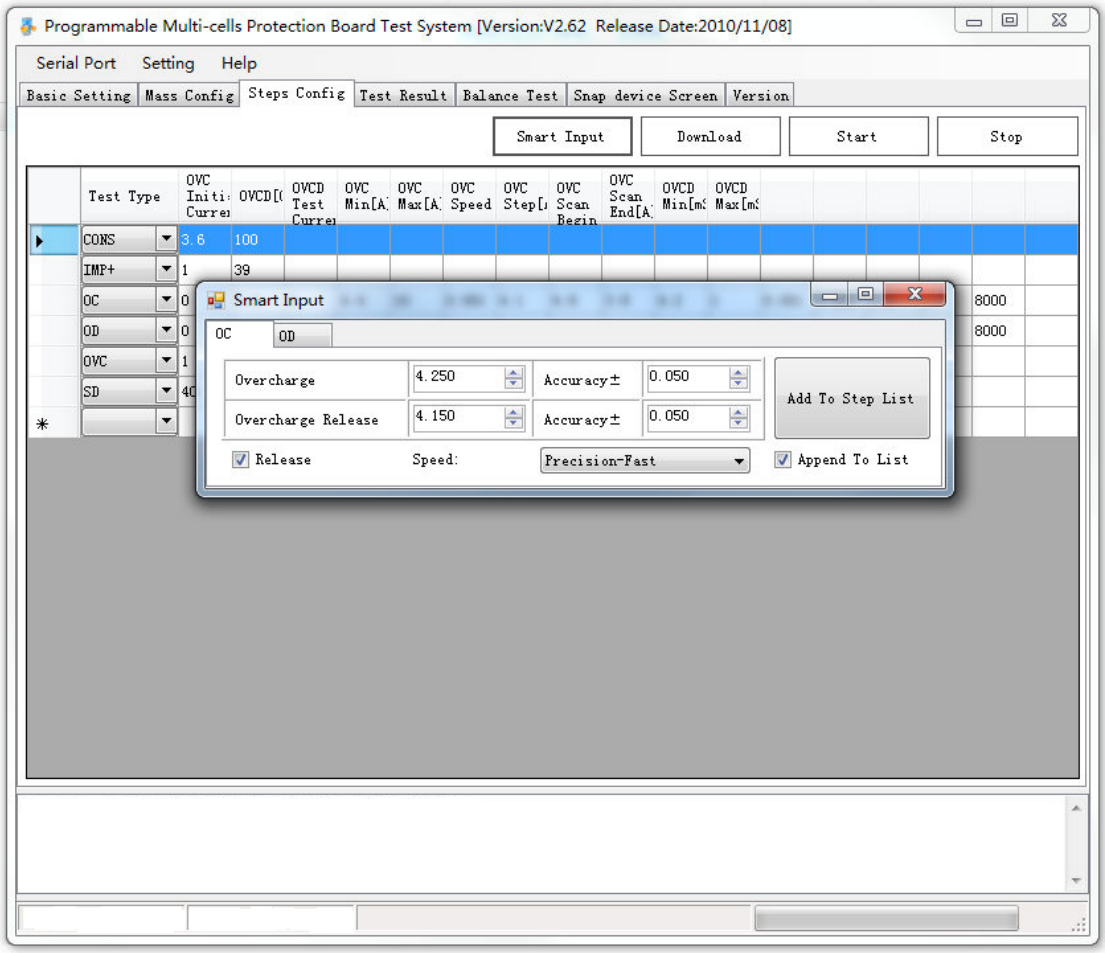

Users only need to set the basic parameters of the protective board, as the standard ones for over-charge protection and reset, and the tester will automatically select the most suitable ones to form a standard testing work step process and, thereafter, it is ok to just click the button of “Add to work step list”.

12. Principle of Check

Principle at over-charge voltage check

Apply a corresponded voltage on each string of the protective board from B1 to Bn and check the motion of the checking protection element. The waveform of the applied voltage is shown below:

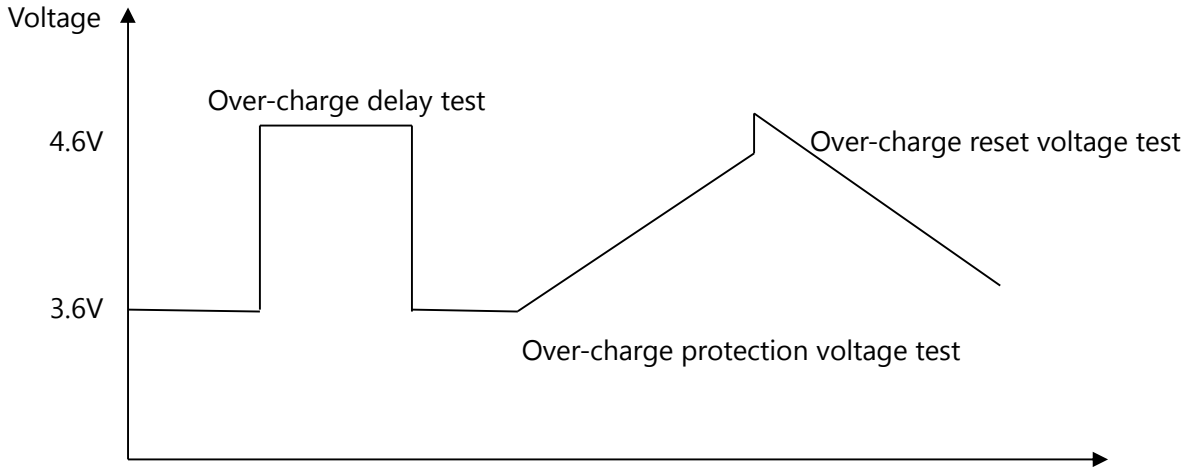

Principle at over-discharge protection check

Apply a corresponded voltage on each string of the protective board from B1 to Bn and check the motion of the checking protection element. The waveform of the applied voltage is shown below:

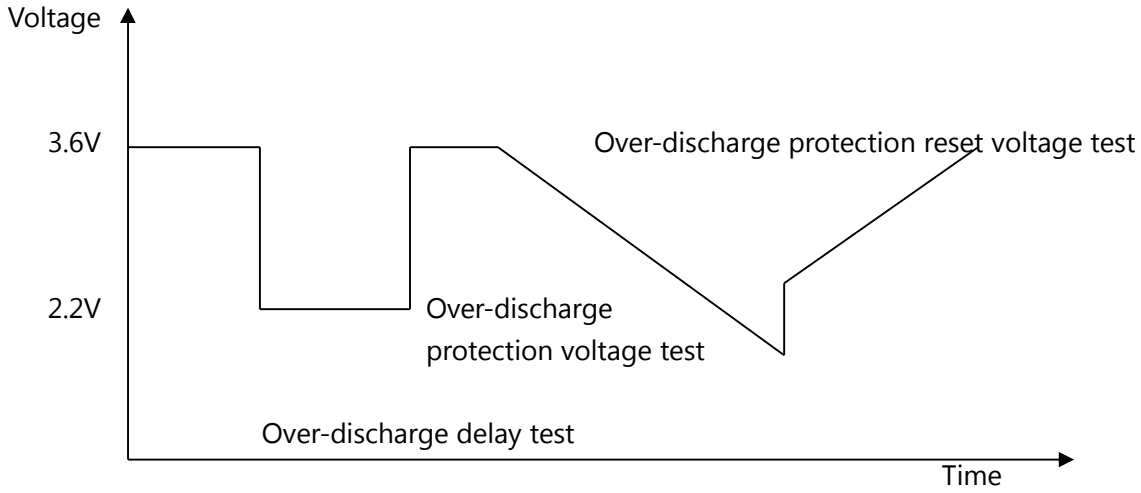

Principle at over-current protection check

Apply a corresponded testing current on the over-current checking element of the protective board and check the motion of the checking protection element. The waveform of the applied current is shown below:

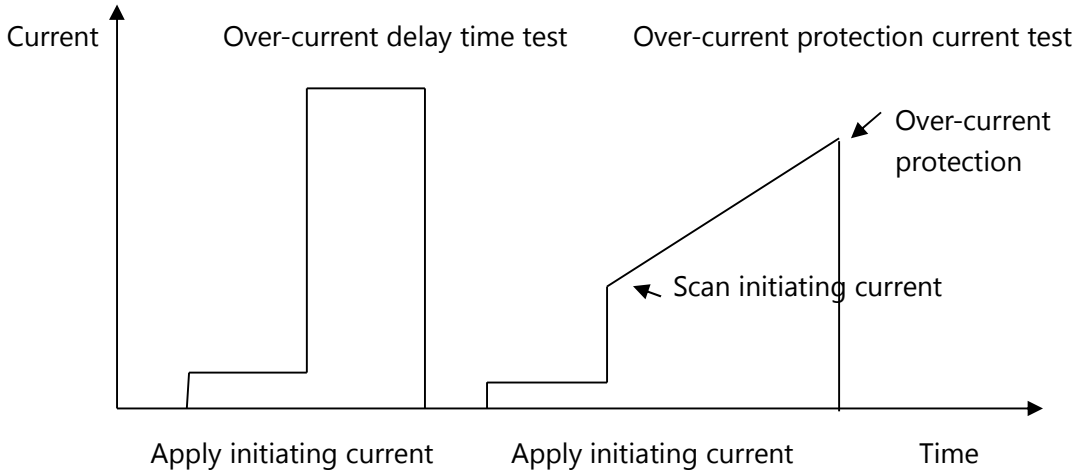

The rising or lowering speed and the initiating points of the above waveform can be set by users with the software and shall be carefully adjusted when need of a quicker speed so as to get the highest one and enhance the efficiency of the production test, provided that the test accuracy is met.

13. Upgrade of Software

Based on the motto of “keep improvement, continue going-ahead”, this Co. will do upgrade of the software for the tester and, with the version renewal, add more new functions. See the page of “Version” for the details.

This Co. will let users know or issue it on the network in case of any new version of the software. Software upgrade is usually issued via the mode of on-line software and, when a new software for the descendent computer, that for the precedent one will also be upgraded.

Software upgrade with the descendent computer is actually carried out via the on-line software of the precedent computer. When need to upgrade the software with a new version, users shall first get the new on-line one and, by running it, click “Upgrade equipment” in the column of “Help”, as shown below:

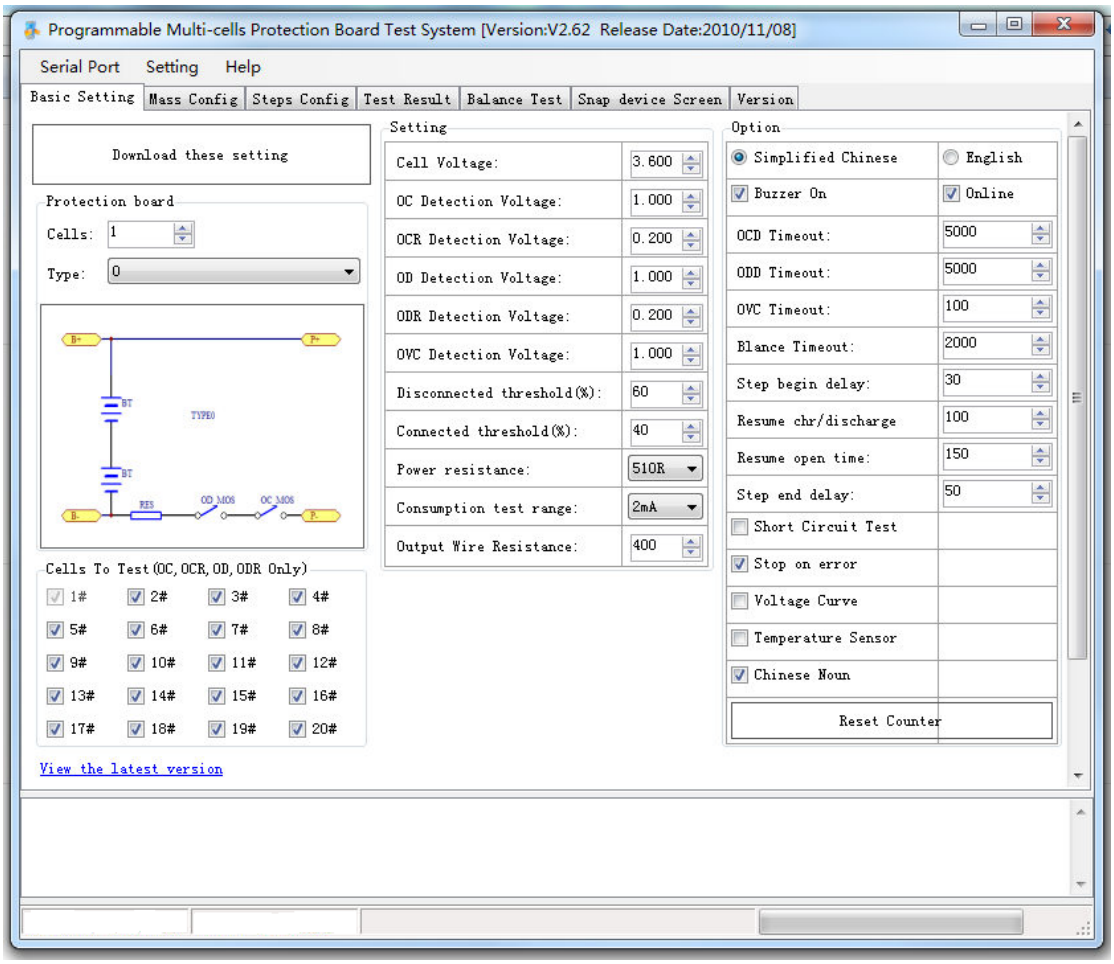

A warning dialogue block will be thereafter pop up:

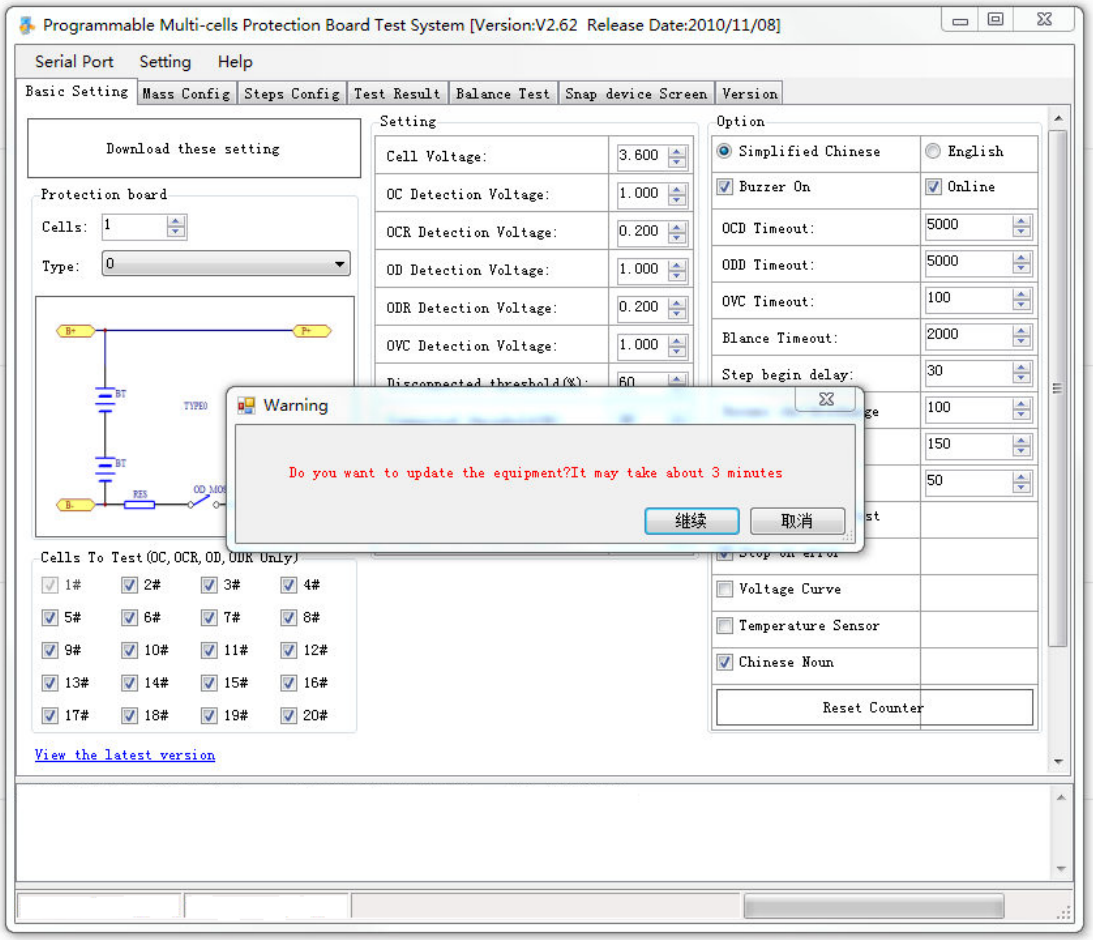

After being confirmed, click “Continue”, the on-line software will download the new software to the tester.

When all the data have been downloaded, the tester will automatically finish upgrading and be restarted twice during the upgrading process. Do not turn off the power of the tester before the upgrade finishes and the normally displayed picture at start is displayed, or the upgrade will be caused failed. This process will need approximate 1-2min.

When the upgrading process is not finished due to power-off or other special condition, please try it again or contact with the technical section of this Co. for settlement.

Sonikcell
Rechargeable Battery

MODEL	STD20S100A		
Specifications			
	Measurement range	Minimum resolution	Measurement accuracy
Overcharge voltage	1.5-5V	1mV	±2 mV
Overcharge release	1.5-5V	1mV	±2 mV
Overdischarge voltage	1.5-5V	1mV	±2 mV
Overdischarge release	1.5-5V	1mV	±2 mV
Iconsumption current	0.1uA-1A	0.1uA	±3 mV
impedance	0-400mΩ	0.1mΩ	±2 mΩ
Over current	1-100A	0.01A	±2uA
Over current delay	0-500mS	1mS	±2mS
Overcharge delay	0-5000mS	1mS	±2mS
Overdischarge delay	0-5000mS	1mS	±2mS
Short delay	0-100mS	0.1mS	±2mS
Balance voltate	0-5V	1mV	±2 mV
Balance current	0-300mA	0.1mA	±2mA
Balance delay	0-5000mS	1mS	±2mS
Short current	100A		

Power supply voltage: 220V±10% 50Hz
Power consumption: 50W at maximum
Weight: 12Kg
Dimensions: L (480mm)×W (390mm)×H (133.2mm)
Packing dimensions: L (560mm)×W (500mm)×H (255mm)
Tare weight: 15Kg