Specification

for

Lithium-ion Rechargeable Cell

Cell Type: 523450AR-1100mAh

Document No	**CT2-A-523450AR**	**Effective date**	**2019-05-09**
Edition	**A00**	**Pages**	**XII**

Approved	**Checked**	**Designed**

Contents

1. Preface

2. Description

3. Specification

4. Dimensions of 523450AR

5. Construction

6. Test Conditions

6.1 Standard Test Conditions

6.2 Standard Charge Method

6.3 Quick Charge Method

7. Electrical Characteristics

8. Environment Characteristic

9. Safety Test

10. Shipment

11. Warranty

12. Precautions and Safety Instructions

12.1 Standard cell Precaution

12.2 Cell Operation Instruction

12.2.1 Charging

12.2.2 Discharging

12.2.3 Storage Recommendation

13. Requirement for Safety Assurance

1. Preface

This Product Specification describes the technique requirements,test procedure and precaution notes of prismatic type Lithium-ion Rechargeable cell to be supplied to customer

2. Description

2.1 Product : Lithium-ion Rechargeable cell

2.2 Model (Type)：SRB **523450AR**

3. Specification

Item	Specification	Remark
3.1 Rated Capacity	1100 mAh	$0.2C_5$ rate， 3.0V cut-off
3.2 Internal Impedanc	≤60mΩ	AC
3.3 Nominal Voltage	3.7 V	From 4.20V to 3.00V
3.4 Charging Current (Std.)	$0.2C_5$	220 mA 0 ~ 45°C
3.5 Charging Voltage	4.20V	
3.6 End-of-charge Current	$0.02C_5$	22 mA At CV mode
3.7 Discharge Cut-off Voltage	3.0 V	
3.8 Charging Time (Std.)	≤8.0 hours	

4. Dimensions

For details,please refer to annex A.

5. Construction

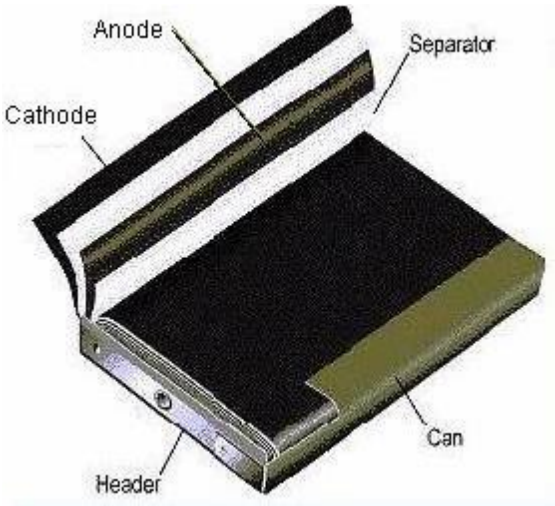

A cell is made of cathode,anode,separator,can and header.

6. Test Conditions

6.1 Standard Test Conditions

Unless otherwise specified, all tests stated in this Product Specification are conducted at temperature 25℃±5℃ and humidity 65%±10% RH.

6.2 Standard Charge Method

The "Standard Charge" means charging the Cell at a constant current of $0.2C_5A$ until the voltage is 4.20V， then charged at a constant voltage of 4.20V until its current is less than $0.02C_5A$.

6.3 Quick Charge Method

The "Quick Charge" means charging the Cell at a constant current of $1C_5A$ until the voltage is 4.20V, then charged at a constant voltage of 4.20V until its current is less than$0.02C_5A$.

7. Electrical Characteristics

Test Item	Test Method	Criteria
7.1 Discharge Performance ($0.2C_5A$)	A cell is charged in accordance with 6.2 or 6.3,and then stored in an ambient temperature of 25℃±5℃for 0.5h～1h, finally discharged to cut-off voltage at a constant current of $0.2C_5A$.	the discharging time is not less than 5h.
7.2 Discharge Performance (1 C_5A)	A cell is charged in accordance with 6.2 or 6.3, and the discharging time is for 0.5h～1h, finally discharged to cut-off voltage at a constant current of 1 C_5A	then stored in an ambient temperature of 25℃±5℃ not less than 54min.
7.3 High mperature Performance	A cell is charged in accordance with 6.2 or 6.3,and stored in an ambient temperature of 55℃±2℃ for 2h，then discharged to cut-off voltage at a constant current of $0.2C_5A$. After that，fetch out the cell and place it in the ambient temperature of 25℃±5℃ for 2h,then check its appearance.	1.the discharging time is not less than 5h; 2.no distortion,no rupture.
7.4 Low Temperature Performance	A cell is charged in accordance with 6.2 or 6.3，and stored in an ambient temperature of -10℃±2℃ for 4h，then discharged to cut-off voltage at a constant current of $0.2C_5A$. After that，fetch out the cell and place it in the ambient temperature of 25℃ ±5℃ for 2h, then check its appearance.	1.the discharging time is not less than 3h; 2.no distortion,no rupture.
7.5Charge(Capacity) Retention	A cell is charged in accordance with 6.2 or 6.3,and stored in an ambient temperature of 25℃±5℃ for 28d,then discharged to cut-off voltage at a constant current of 0.2 C_5A.	Retention:85%C_5Ah

7.6 Cycle Life	A cell is charged in accordance with 6.3，and stored for 0.5h～1h，then discharged to cut-off voltage，after that， stored 0.5h～1h prior to next charge-discharge cycle.The cell shall be continuously charged and discharged for 300 times.	capacity retention≥80%

8. Environment Characteristic

Test Item	Test Method	Criteria
8.1 Constant Temperature and Humidity	A cell is charged in accordance with 6.2 or 6.3，and stored in an ambient temperature of 40±2 ℃(90～95%RH) for 48h，then fume placed in room temperature for 2h. After that，check its appearance prior to being discharged to cut-off voltage at a constant current of 0.2C_5A.	1.no distorsion，no rust，no explosion; 2.the discharging time is not less than 36min.
8.2 Vibration Test	A cell is charged in accordance with 6.2 or 6.3,then installed onto the vibration desk with clamps. Equipment parameters of leakage frequency and amplitude are as follows(the frequency is to be varied at the rate of 1oct/min between 10 and 55 herts,and repeat vibration for 30min.The cell is to be tested in three mutually perpendicular directions): frequency:10Hz~30Hz amplitude: 0.38mm frequency:30Hz~55Hz amplitude: 0.19mm	1.no scratch， no fume，no explosion; 2.the voltage is 3.6V.

8.3 Drop test	A cell is charged in accordance with 6.2 or 6.3，then dropped from a height of 1000mm to a wooden board(18-20mm thick) which is placed on the concrete ground.Cells shall be dropped in each of three mutually perpendicular directions.Total drop times are 6.After that，the cell is discharged to cut-off voltage at CC of 1 C_5A，then repeat charge & discharge at a current of 1 C_5A until the discharge time is not less than 51min,the cycle times should be not more than 3.	no leakage,no fume, no explosion.

9. Safety Test

All below tests are carried out on the equipments with foreced ventilation and explosion-proof device. Before test,all cells are charged in accordance with 6.2 or 6.3, and stored 24h prior to testing.

Test Item	Test Method	Criteria
9.1 Impact Test	A cell is to be placed on the impact flat. And a Φ15.8mm ±2mm steel columns placed in the battery center，A 9.1kg ±0.1kg weight is to be dropped from a height of 610mm± 25mm， Drop onto the steel columns over the center battery, the distortion is allowed.	no fire,no explosion
9.2 Heating Test	A cell is to be heated in a circulating air oven. The temperature of the oven is to be raised at a rate of 5℃±2℃ per minute to a temperature of 130℃±2℃ and remain for 30min at that temperature before the test is discontinued.	no fire,no explosion
9.3 overcharge test （3C/4.6V）	A cell is to be subjected to CC/CV power by connecting its positive & negative terminal, then set the current as $3C_5A$,the voltage as 4.6V,after that,Charge the cell up to 4.6V at CC of 3 C_5A and last 2h at the voltage of 4.6V.	no fire,no explosion
9.4 Short-circuit test	A Cell is to be short-circuited by connecting the positive and negative terminals of the cell with copper wire having a maximum resistance load of 80±20 mΩ.Monitor its temperature while testing，the cell is to be discharged until the cell case temperature has returned to be 10℃ less then peak temperature.	no fire,no explosion

10. Shipment

The Cell shall be shipped in voltage range of 3.80 ~ 4.00 V or in accordance with customers' requirement. The remaining capacity before charging shall be changed depending on the storage time and conditions.

11. Warranty

The Warranty period of cell is made according to business contract,,However, even though the problem occurs within this period, We won't replace a new cell for free as long as the problem is not due to the failure of We manufacturing process or is due to customer's abuse or misuse.

＞ We will not be responsible for trouble occurred by handling outside of the precautions in instructions..
＞ We will not be responsible for trouble occurred by matching electric circuit,cell pack and charger.
＞ We will be exempt from warrantee any defect cells during assembling after acceptance.

12. Precautions and Safety Instructions

Lithium-Ion rechargeable batteries subject to abusive conditions can cause damage to the cell and/or personal injury. Please read and observe the standard cell precautions below before using utilization.
Note 1. The customer is required to contact We in advance, if and when the customer needs other applications or operating conditions than those described in this document.

Note 2. We will take no responsibility for any accident when the cell is used under other conditions than those described in this Document.

12.1 Standard cell Precaution

a. Do not expose the cell to extreme heat or flame.
b. Do not short circuit, over-charge or over-discharge the cell.
c. Do not subject the cell to strong mechanical shocks.
d. Do not immerse the cell in water or sea water, or get it wet..
e. Do not reverse the polarity of the cell for any reason.
f. Do not disassemble or modify the cell.
h. Do not handle or store with metallic like necklaces, coins or hairpins， etc.
i. Do not use the cell with conspicuous damage or deformation.
j. Do not connect cell to the plug socket or car-cigarette-plug.
k. Do not make the direct soldering onto a cell.
l. Do not touch a leaked cell directly.
m. Do not use for other equipment.
n. Do not use Lithium-ion cell in mixture.
o. Do not use or leave the cell under the blazing sun (or in heated car by sunshine).
p. Keep cell away from children.
q. Do not drive a nail into the cell,strike it by hammer or tread it.
r. Do not give cell impact or fling it.

12.2 cell Operation Instruction

12.2.1. Charging

a. Charge the cell in a temperature range of 10°C to + 45°C.
b. Charge the cell at a constant current of 0.5C until 4.20V is attained. Charge rates greater than 1C are NOT recommended. (C : Rated Capacity of cell)

c. Maintain charge voltage at 4.20V for 3.0 hours (recommended for maximum capacity).
* Use a constant current, constant voltage (CC/CV) lithium-ion (Li+) cell charge controller.
* Do not continue to charge cell over specified time.

12.2.2. Discharging

a. Recommended cut-off voltage to 3.0V. Recommended max discharge rate is 1C at constant current.
b. For maximum performance， discharge the cell in a temperature range of 10°C to + 45°C.

12.2.3. Storage Recommendations

a. Storage Temperature and Humidity
• Storage the cell at temperature of 10 ~ 45°C, low humidity and no corrosive gas atmosphere.
• No press on the cell
b. Long Period Storage
• In case of long period storage (more than 3 months), storage the cell at temperature range of 10 ~ +20 °C, low humidity, no corrosive gas atmosphere.
• No press on the cell

14. Requirement for Safety Assurance

For the sake of safety assurance, please discuss the equipment design, its system and protection circuit of Lithium-ion cell with We in advance.And consult about the high rate current, rapid charge and special application in the same way.
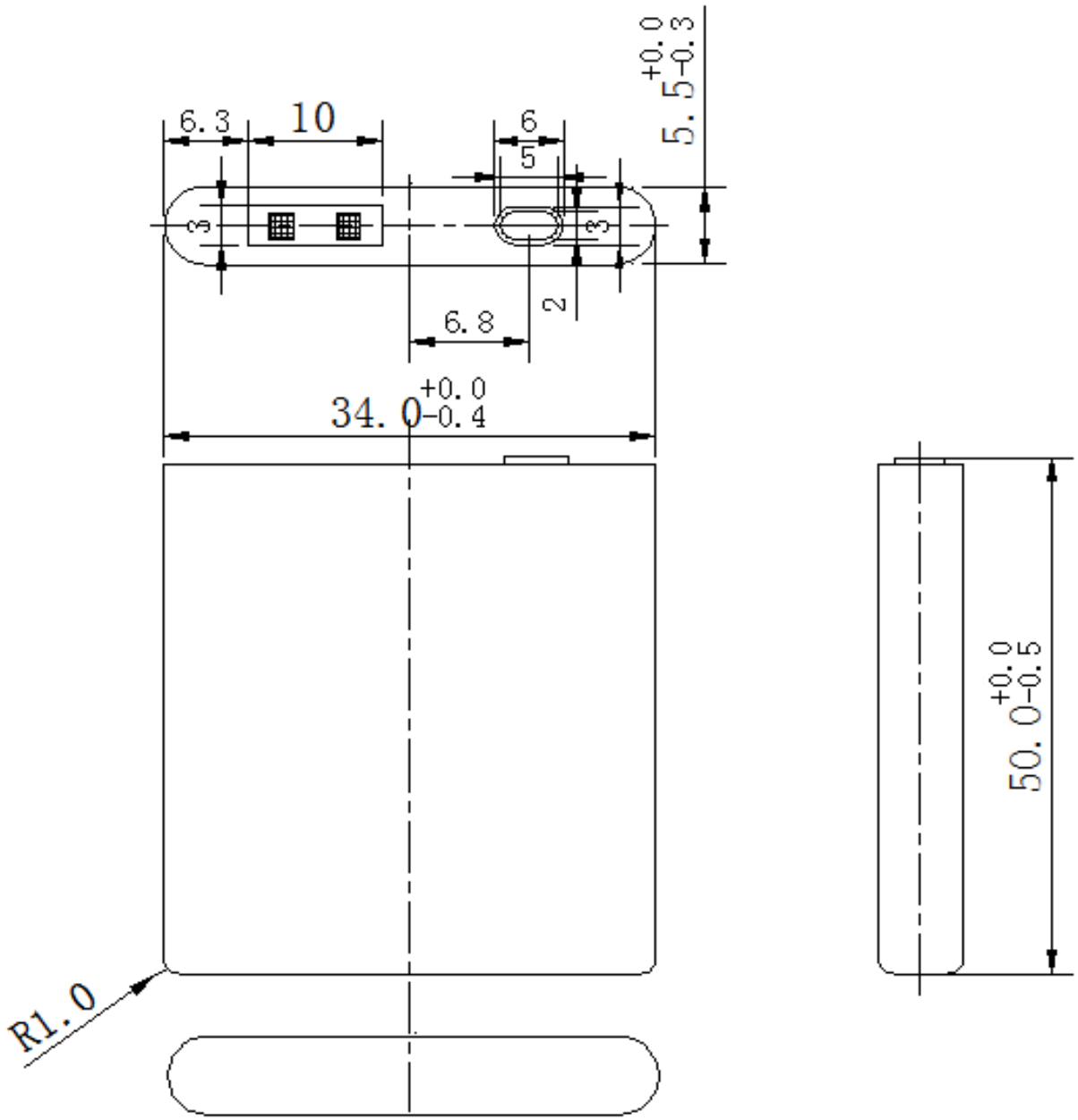
	523450AR-1100mAh